Programmable AC Power Supply

IT7900E Series User Manual

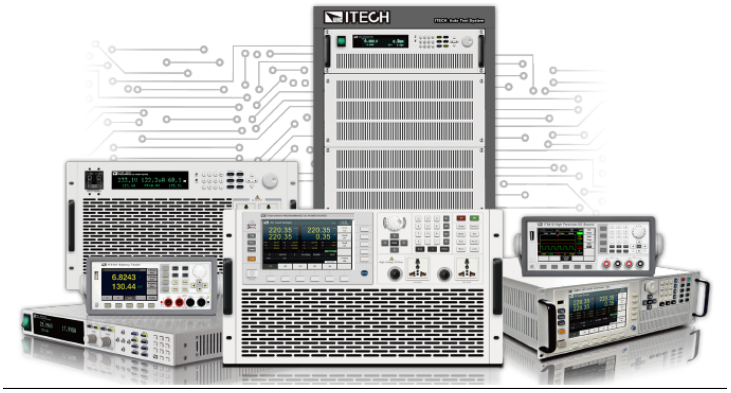

Model: IT7900E

Version: V2.0/2026.01

Notices

© Itech Electronic, Co., Ltd. 2026
No part of this manual may be reproduced in any form or by any means (including electronic storage and retrieval or translation into a foreign language) without prior permission and written consent from Itech Electronic, Co., Ltd. as governed by international copyright laws.

Manual Part Number

IT7900E

Revision

2nd Edition: Jan.13, 2026.

Itech Electronic, Co., Ltd.

Trademarks

Pentium is U.S. registered trademarks of Intel Corporation.

Microsoft, Visual Studio, Windows and MS Windows are registered trademarks of Microsoft Corporation in the United States and/or other countries and regions.

Warranty

The materials contained in this document are provided “as is”, and is subject to change, without prior notice, in future editions. Further, to the maximum extent permitted by applicable laws, ITECH disclaims all warrants, either express or implied, with regard to this manual and any information contained herein, including but not limited to the implied warranties of merchantability and fitness for a particular purpose. ITECH shall not be held liable for errors or for incidental or indirect damages in connection with the furnishing, use or application of this document or of any information contained herein. Should ITECH and the user enter into a separate written agreement with warranty terms covering the materials in this document that conflict with these terms, the warranty terms in the separate agreement shall prevail.

Technology Licenses

The hardware and/or software described herein are furnished under a license and may be used or copied only in accordance with the terms of such license.

Restricted Rights Legend

Restricted permissions of the U.S. government. Permissions for software and technical data which are authorized to the U.S. Government only include those for custom provision to end users. ITECH provides this customary commercial license in software and technical data pursuant to FAR 12.211 (Technical Data) and 12.212 (Computer Software) and DFARS 252.227-7015 (Technical Data – Commercial Items) and DFARS 227.7202-3 (Rights in Commercial Computer Software or Computer Software Documentation).

Safety Notices

CAUTION

A CAUTION sign denotes a hazard. It calls attention to an operating procedure or practice that, if not correctly performed or adhered to, could result in damage to the product or loss of important data. Do not proceed beyond a CAUTION sign until the indicated conditions are fully understood and met.

WARNING

A WARNING sign denotes a hazard. It calls attention to an operating procedure or practice that, if not correctly performed or adhered to, could result in personal injury or death. Do not proceed beyond a WARNING sign until the indicated conditions are fully understood and met.

NOTE

A NOTE sign denotes important hint. It calls attention to tips or supplementary information that is essential for users to refer to.

Quality Certification and Assurance

We certify that IT7900E series power supply meets all the published specifications at time of shipment from the factory.

Warranty

ITECH warrants that the product will be free from defects in material and workmanship under normal use for a period of one (1) year from the date of delivery (except those described in the Limitation of Warranty below).

NOTE

Visit https://www.itechate.com/en/support/register.html to complete product registration by filling out the necessary information to extend the warranty to two (2) years.

For warranty service or repair, the product must be returned to a service center designated by ITECH.

- The product returned to ITECH for warranty service must be shipped PREPAID. And ITECH will pay for return of the product to customer.
- If the product is returned to ITECH for warranty service from overseas, all the freights, duties and other taxes shall be on the account of customer.

Limitation of Warranty

This Warranty will be rendered invalid if the product is:

- Damaged resulting from customer-wired circuits or customer-supplied parts or accessories;
- Modified or repaired by customer without authorization;
- Damaged resulting from customer-wired circuits or use in an environment not designated by us;
- The product model or serial number is altered, deleted, removed or made illegible by customer;
- Damaged as a result of accidents, including but not limited to lightning, moisture, fire, improper use or negligence.

Safety Symbols

⎓	Direct current	|	ON (power)
∼	Alternating current	○	OFF (power)
≂	Both direct and alternating current	⏸	Power-on state
⏚	Chassis (earth ground) symbol.	⏹	Power-off state
⏚	Earth (ground) terminal	⏚	Reference terminal

	Caution	+	Positive terminal
	Warning (refer to this manual for specific Warning or Caution information)	—	Negative terminal
	A chassis terminal	-	-

Safety Precautions

The following safety precautions must be observed during all phases of operation of this instrument. Failure to comply with these precautions or specific warnings elsewhere in this manual will constitute a default under safety standards of design, manufacture and intended use of the instrument. ITECH assumes no liability for the customer's failure to comply with these precautions.

WARNING

- **Do not use the instrument if it is damaged. Before operation, check the casing to see whether it cracks. Do not operate the instrument in the presence of inflammable gasses, vapors or dusts.**
- **The instrument is provided with a power cord during delivery and should be connected to a socket with a protective earth terminal, a junction box or a three-phase distribution box. Before operation, be sure that the instrument is well grounded.**
- **Check all marks on the instrument before connecting the instrument to power supply.**
- **Use electric wires of appropriate load. All loading wires should be capable of bearing maximum short-circuit of electronic load without overheating. If there are multiple loads, each pair of the load power cord must be carry out the full rated short-circuit output current of the power securely.**
- **Ensure the voltage fluctuation of mains supply is less than 10% of the working voltage range in order to reduce risks of fire and electric shock.**
- **Do not install alternative parts on the instrument or perform any unauthorized modification.**
- **Do not use the instrument if the detachable cover is removed or loosen.**
- **To prevent the possibility of accidental injuries, be sure to use the power adapter supplied by the manufacturer only.**
- **We do not accept responsibility for any direct or indirect financial damage or loss of profit that might occur when using the instrument.**
- **This instrument is used for industrial purposes, do not apply this product to IT power supply system.**
- **Never use the instrument with a life-support system or any other equipment subject to safety requirements.**

Copyright ©ITECH Electronic Co., Ltd.

WARNING

- SHOCK HAZARD Ground the Instrument. This product is provided with a protective earth terminal. To minimize shock hazard, the instrument must be connected to the AC mains through a grounded power cable, with the ground wire firmly connected to an electrical ground (safety ground) at the power outlet or distribution box. Any interruption of the protective (grounding) conductor or disconnection of the protective earth terminal will cause a potential shock hazard that could result in injury or death.
- Before applying power, verify that all safety precautions are taken. All connections must be made with the instrument turned off, and must be performed by qualified personnel who are aware of the hazards involved. Improper actions can cause fatal injury as well as equipment damage.
- SHOCK HAZARD, LETHAL VOLTAGES This product can input the dangerous voltage that can cause personal injury, and the operator must always be protected from electric shock. Ensure that the input electrodes are either insulated or covered using the safety covers provided, so that no accidental contact with lethal voltages can occur.
- Never touch cables or connections immediately after turning off the instrument. Verify that there is no dangerous voltage on the electrodes or sense terminals before touching them.

CAUTION

- **Failure to use the instrument as directed by the manufacturer may render its protective features void.**
- **Always clean the casing with a dry cloth. Do not clean the internals.**
- **Make sure the vent hole is always unblocked.**

Environmental Conditions

The instrument is designed for indoor use and an area with low condensation. The table below shows the general environmental requirements for the instrument.

Environmental Conditions	Requirements
Operating temperature	0°C～50°C
Operating humidity	20%～80%(non-condensation)
Storage temperature	-10°C～70 °C
Altitude	Operating up to 2,000 meters
Installation category	II
Pollution degree	Pollution degree 2

Note

To make accurate measurements, allow the instrument to warm up for 30 min.

Regulatory Markings

CE	The CE mark indicates that the product complies with all the relevant European legal directives. The specific year (if any) affixed refers to the year when the design was approved.

	The instrument complies with the WEEE Directive (2002/96/EC) marking requirement. This affix product label indicates that you must not discard the electrical/electronic product in domestic household waste.
	This symbol indicates the time period during which no hazardous or toxic substances are expected to leak or deteriorate during normal use. The expected useful life of the product is 10 years. The product can be used safely during the 10-year Environment Friendly Use Period (EFUP). Upon expiration of the EFUP, the product must be immediately recycled.

Waste Electrical and Electronic Equipment (WEEE) Directive

2002/96/EC Waste Electrical and Electronic Equipment (WEEE) Directive
This product complies with the WEEE Directive (2002/96/EC) marking requirement. This affix product label indicates that you must not discard the electrical/electronic product in domestic household waste.
Product Category
With reference to the equipment classifications described in the Annex 1 of the WEEE Directive, this instrument is classified as a “Monitoring and Control Instrument”.
To return this unwanted instrument, contact your nearest ITECH office.

Compliance Information

Complies with the essential requirements of the following applicable European Directives, and carries the CE marking accordingly:

- Electromagnetic Compatibility (EMC) Directive 2014/30/EU
- Low-Voltage Directive (Safety) 2014/35/EU

Conforms with the following product standards:

EMC Standard

IEC 61326-1:2012/ EN 61326-1:2013 [1][2][3]
Reference Standards
CISPR 11:2009+A1:2010/ EN 55011:2009+A1:2010 (Group 1, Class A)
IEC 61000-4-2:2008/ EN 61000-4-2:2009
IEC 61000-4-3:2006+A1:2007+A2:2010/ EN 61000-4-3:2006+A1:2008+A2:2010
IEC 61000-4-4:2004+A1:2010/ EN 61000-4-4:2004+A1:2010
IEC 61000-4-5:2005/ EN 61000-4-5:2006
IEC 61000-4-6:2008/ EN 61000-4-6:2009
IEC 61000-4-11:2004/ EN 61000-4-11:2004

1. The product is intended for use in non-residential/non-domestic environments. Use of the product in residential/domestic environments may cause electromagnetic interference.
2. Connection of the instrument to a test object may produce radiations beyond the specified limit.
3. Use high-performance shielded interface cable to ensure conformity with the EMC standards listed above.

Safety Standard

IEC 61010-1:2010/ EN 61010-1:2010

Content

Quality Certification and Assurance i
Warranty i
Limitation of Warranty i
Safety Symbols i
Safety Precautions ii
Environmental Conditions iii
Regulatory Markings iii
Waste Electrical and Electronic Equipment (WEEE) Directive iv
Compliance Information v

Chapter1 Overview 9

1.1 Brief Introduction 9
1.2 Models and Options 10
1.3 Optional accessories 10
1.4 Instrument Size Introduction 11

Chapter2 Instrument Introduction 17

2.1 Unpacking and Transportation 17
2.2 Verifying the Shipment 18
2.3 Front Panel 19
2.4 Keyboard 19
2.5 Push-on Knob 21
2.6 Rear Panel 22

Chapter3 Installation 25

3.1 Connecting the Power Cord 25
3.2 Connecting Test Lines (Optional) 27
3.3 Installing Fiber Cables (Only for IT7942E-350-210) 32

Chapter4 Getting Started 33

4.1 Power-on the Instrument 33
4.2 Home-Screen Overview 34
4.3 Touch Screen Introduction 37
4.4 Set output parameters 38
4.5 Output On/Off Control 38

Chapter5 Operation and Application 41

5.1 full 4-Quadrant output character 41
5.2 Select the Power Supply Mode 42
5.3 Select the Output Mode 42
5.3.1 AC Output Mode 42
5.3.2 DC Output Mode 43
5.3.3 AC+DC Mode 43
5.3.4 DC+AC Mode 44
5.4 Current Limit Mode and Power Limit Mode 45
5.5 Professional Anti-islanding Test Mode 45
5.6 Waveform Selection 47
5.7 Full 4-Quadrant Power Amplifier 48
5.8 Auto-range Function 48
5.9 Programmable Output Impedance 48
5.10 Sweep Function 48
5.11 Standard IEC Regulations 50

Chapter6 System-Related Functions 54

6.1 System Menu Reference 54
6.1.1 Menu function 60
6.1.2 Set the communication interface 62

6.1.3 View the System Information *62*
6.2 Configuration Menu Reference 62
6.3 Key Lock Function 65
6.4 Switching Local/Remote Mode 66
6.5 Save and Recall Operations 66
6.6 Protection Function 67
6.6.1 Current RMS Protection *68*
6.6.2 Set the Current Peak protection *69*
6.6.3 Set Voltage/Current/Power Limit Range *69*
6.6.4 Over-temperature protection (OTP) *69*
6.6.5 Over-power protection (OPP) *70*
6.7 Screen Capture Function 70
6.8 Trigger Function 70
6.9 Query the System Log 70
6.10 Query the Energy 70
6.11 Set Parallel Operation Mode 71
6.12 Remote Measurement Function 75
6.13 Digital I/O Function 76
6.14 Analogue Function (Ext-Program) (Optional) 79

Chapter7 Current Source Mode Operation 83

7.1 Select the Power Supply 83
7.2 Select the Output Mode 83
7.2.1 AC Output Mode *83*
7.2.2 AC+DC Output Mode *84*

Chapter8 Measurement Functions 85

8.1 Meter Mode 85
8.2 Oscilloscope Mode 86
8.3 Harmonic measurement 88
8.3.1 Harmonic measurement *88*
8.3.2 Harmonic Analysis *90*
8.4 Recorder Function 92

Chapter9 Configuration Arbitrary Waveform 94

9.1 List Function 94
9.1.1 Create a new List file *94*
9.1.2 Select/Run List File *96*
9.1.3 Import/Export List file *97*
9.2 Setting of Surge/Sag Configuration 97
9.3 Self-defined Waveform Function 99
9.3.1 THD *99*
9.3.2 User-defined waveform *101*
9.4 Interharmnics function 103

Chapter10 Technical Specifications 106

10.1 Supplemental characteristics 106
10.2 Main technical parameters 106
IT7921E-350-105 ..... *106*
IT7942E-350-210 ..... *110*
IT7963E-350-315 ..... *115*
IT7984E-350-420 ..... *120*
IT79105E-350-525 ..... *124*
IT79126E-350-630 ..... *129*

Chapter11 Remote Control 134

11.1 USB Interface 134
11.2 LAN Interface 134
11.3 CAN Interface 137

11.4 GPIB Interface (Optional) 138
11.5 RS–232 Interface (Optional) 139
11.6 Commonly Used Commands Overview 140
11.7 Demo Software Introduction 141

Appendix 142

Specifications of Red and Black Test Lines 142

Chapter1 Overview

This chapter introduces the front panel, the rear panel, key functions and LCD display function of the IT7900E series power supply, make sure that you can quickly know the appearance, instruction and the key function before you operate the power supply. Help you make better use of this series of power supply.

1.1 Brief Introduction

The IT7900E series is a programmable, four-quadrant grid simulator. It is also a four-quadrant power amplifier, which can be used to test various grid-connected equipment. For example, PCS, energy storage system, microgrid, BOBC (V2X), PHiL, etc. With advanced SiC technolgoy, a single unit of IT7900E can realize the anti-islanding protection test through islanding mode(RLC settable). Besides, the power density of IT7900E series is very high, 6kVA in 1U, 15kVA in 3U. After parallel connection, the power can be extended to 960kVA at most. Rich operating modes meet various test requirement of single-phase, three-phase, reverse-phase and multi-channel. In reverse mode, the voltage can be extended to 200% of the rated voltage. The strong arbitrary waveform editing function can simulate various power grid disturbance waveforms, making it an ideal choice for testing and R&D laboratories.

- Adopt advanced SiC technology
- High power density/minimum rack space, 3U up to 21kVA
- Frequency: 16Hz~150Hz
- Regenerative grid simulator & full 4-Quadrant AC&DC power sources
- Power Amplifier function for PHiL applications
- Three working modes: CV/Current Limit/Power Limit
- AC, DC, AC+DC or DC+AC output capability
- Comprehensive working modes selectable: single-phase, three-phase, reversed phase
- Programmable Output Impedance, allows simulation of real-World
- Utility Grid Impedance
- Compliance tests incl LVRT /Phase Jump/Frequency variation/Harmonic Injection
- Supported regulatory testing include IEC61000-4-11/4-13/4-14/4-17/4-28

- Wide voltage ranges: 350 VL-N
- Master-slave parallel with current sharing technology, up to 1MVA+
- Intuitive touch screen;Built-in single/3-phase AC power meter; Scope function
- Fast response time and high accuracy 0.1%+0.2%FS
- Waveforms Library : Sine wave, Square wave,Triangle wave, Clipped sine waves, trapezoidal wave, self-defined waves
- Harmonics and Interharmonics waveform synthesizer
- Power line disturbance simulation testing by LIST programming/
- SWEEP/Surge&Sag functions
- Up to 50th harmonic simulation and analysis function is included, along with built-in IEC61000-3-2/3-12 and other test regulations *1
- Harmonic simulation and analysis function can measure 50th order, built-in IEC61000-3-2/3-12 and other test regulations
- Output 0-360 ° start/stop phase angle can be set
- Front panel USB port for data and waveform import and export
- Relay CTRL function, to cut off the connection between instrument and DUT
- Built-in USB/CAN/LXI compliant LAN interface/Digital IO interface, optional GPIB /Analog&RS232
- Support CANopen, Modbus, LXI, SCPI communication

*1. Voltage/current harmonic analysis

1.2 Models and Options

Model	V L-N	V L-L	Current	Power	Phase	Height
IT7921E-350-105	350V L-N	606V L-L	105Arms/35Arms	21kVA	1Φ or 3Φ	3U
IT7942E-350-210	350V L-N	606V L-L	210Arms/70Arms	42kVA	1Φ or 3Φ	6U
IT7963E-350-315	350V L-N	606V L-L	315Arms/105Arms	63kVA	1Φ or 3Φ	15U
IT7984E-350-420	350V L-N	606V L-L	420Arms/140Arms	84kVA	1Φ or 3Φ	27U
IT79105E-350-525	350V L-N	606V L-L	525Arms/175Arms	105kVA	1Φ or 3Φ	27U
IT79126E-350-630	350V L-N	606V L-L	630Arms/210Arms	126kVA	1Φ or 3Φ	27U

Note

Naming rules for this series of model are as follows: IT79XXX-YYY-ZZZ, wherein, XXX means rated power, YYY means rated voltage, and ZZZ means rated current. Take IT7921E-350-105 for an example, the rated power is 21kVA, rated voltage is 350V and rated current is 105A.

1.3 Optional accessories

The IT7900E series supports the following optional accessories (sold separately), the details are as below:

The interface expansion slot provided on the rear panel of the IT7900 series instrument allows users to flexibly expand according to their needs. Different interface cards can be selected to achieve different functions.

The following optional accessories from ITECH are sold separately. Users need

to purchase separately.

Device Name	Model	Description
GPIB communication interface	IT-E176	When the user needs to use GPIB interface to enable remote operation, this option is the right choice.
RS232+Analog	IT-E177	Interface card that includes RS-232 communication interface and external analog. When the user needs to use RS-232 or external analog interface to enable remote operation, this option is the right choice.
Fiber optic modules and cables	IT-E168	Used for parallel connection between the units in a cabinet, including one fiber module and two fiber cables, with lengths of 1.5 meters and 0.3 meters. The fiber optic module and cable are the necessary accessories for the parallel connection. Different numbers of fiber optic modules and cables are used in different numbers of parallels.
Fiber optic modules and cables	IT-E169	Used for parallel connection between cabinets, including one fiber module and one 2.5m fiber cable. The fiber optic module and cable are the necessary accessories for the parallel connection. Different numbers of fiber optic modules and cables are used in different numbers of parallels.

1.4 Instrument Size Introduction

The instrument should be installed at well-ventilated and rational-sized space. Please select appropriate space for installation based on the power supply size.

IT7921E-350-105 Model

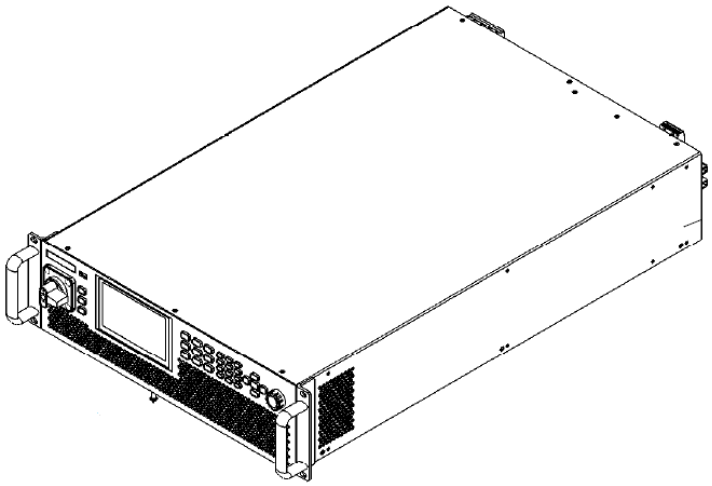

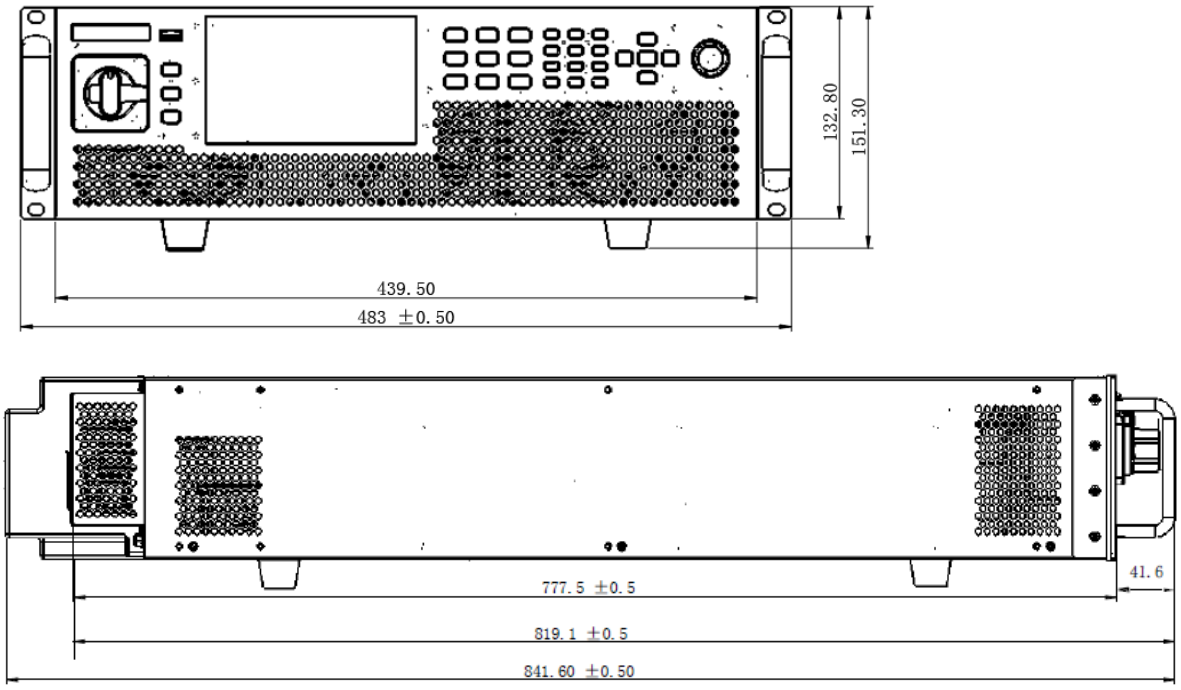

IT7942E-350-210 Model

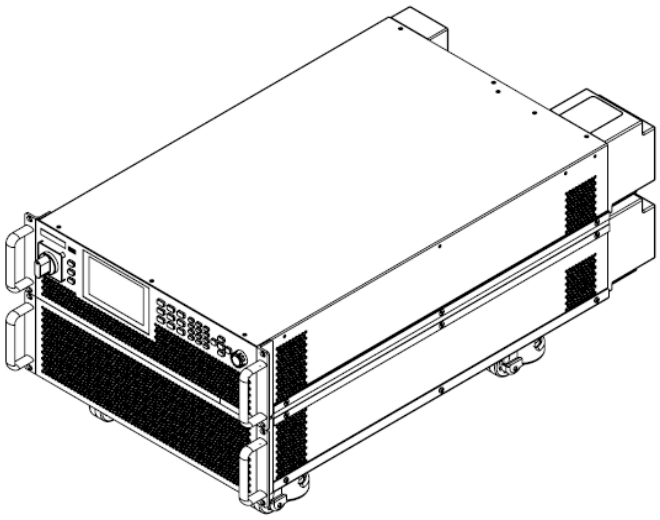

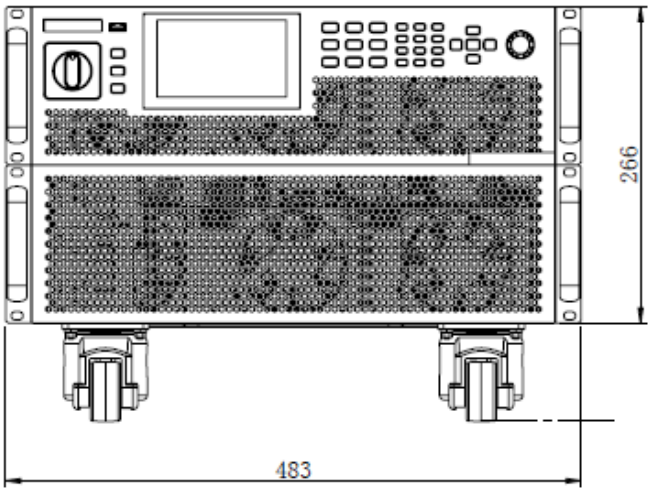

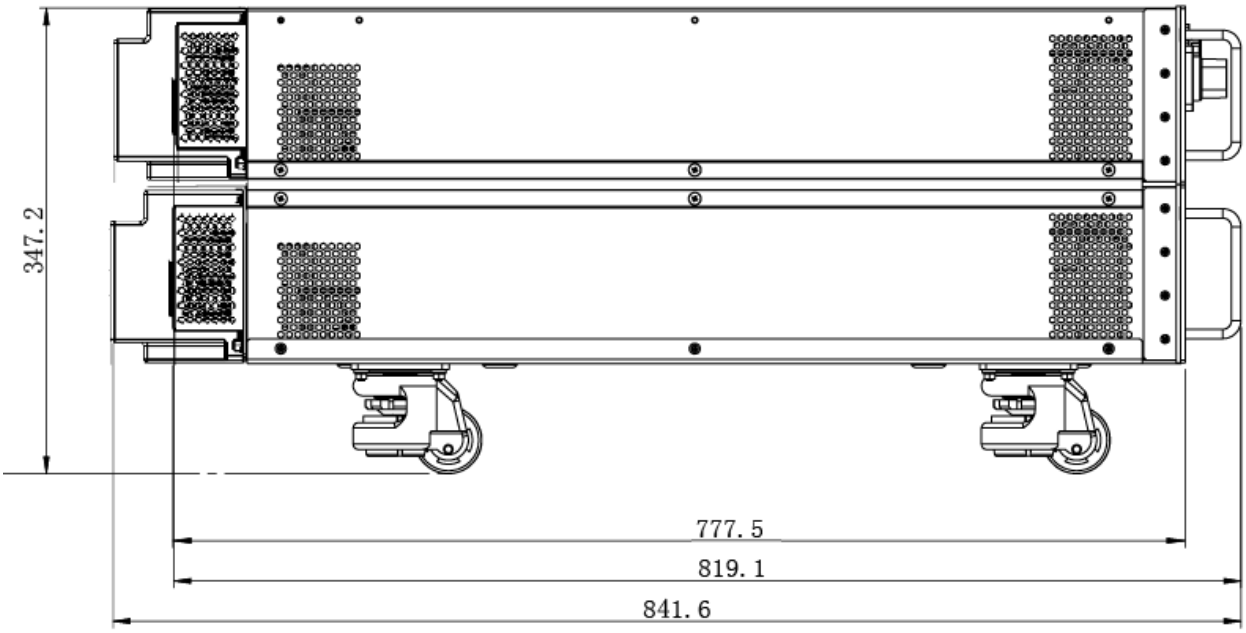
347.2
777.5
819.1
841.6

IT7963E-350-315 Model

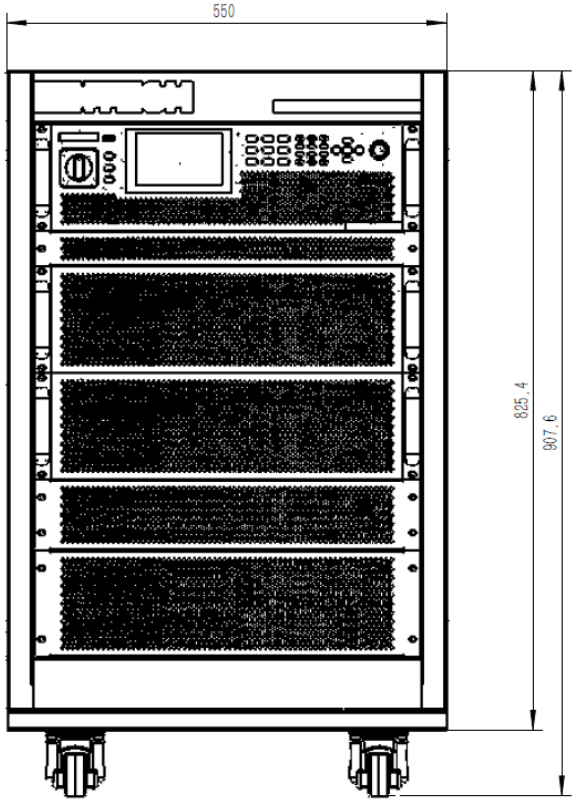

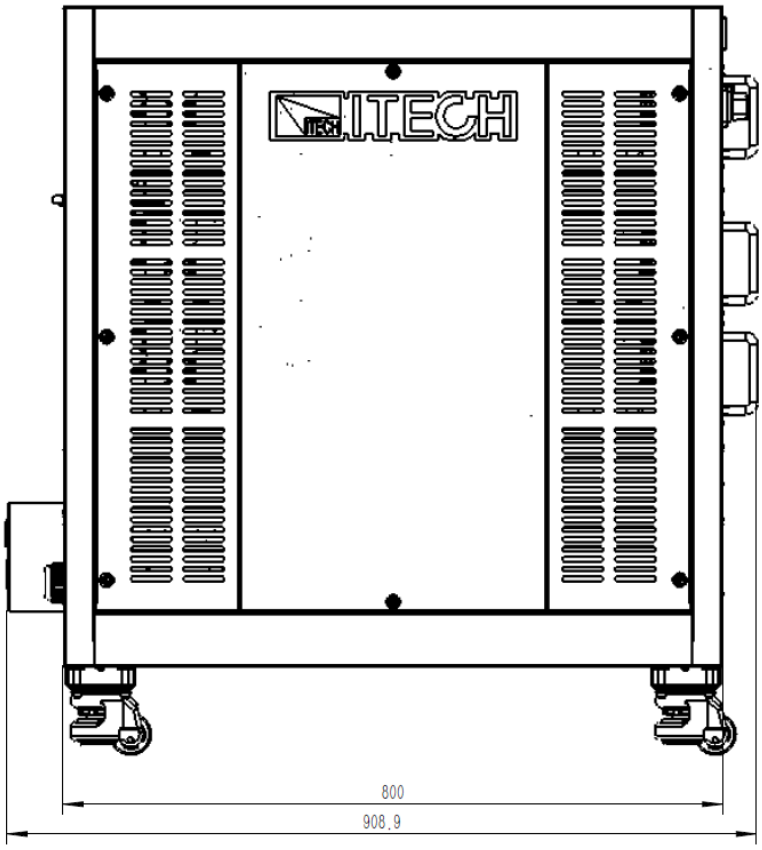

IT7984E-350-420/IT79105E-350-525/IT79126E-350-630 Model

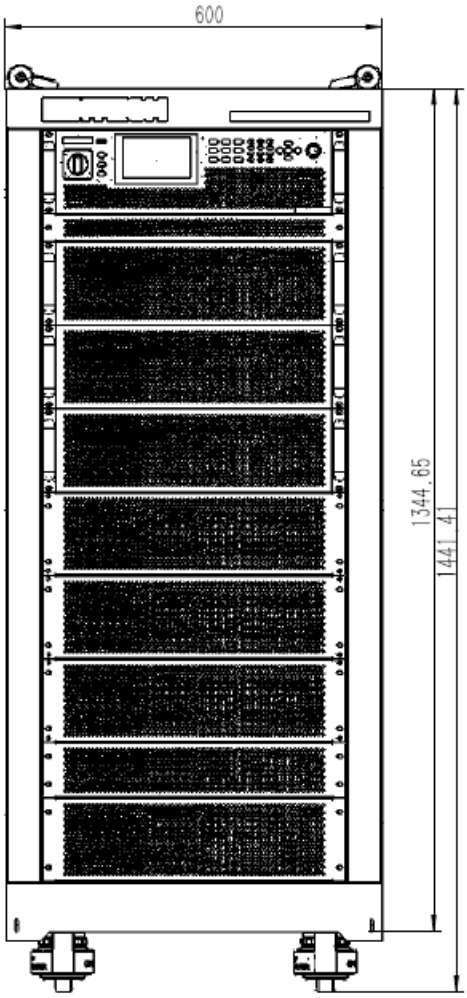

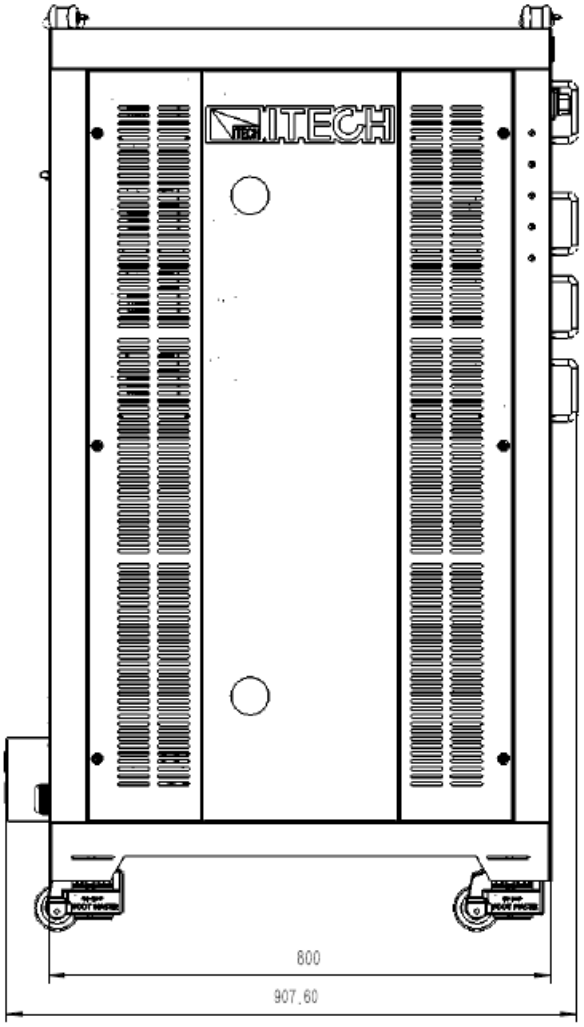

IT79168E-350-840/IT79189-350-945/IT79210E-350-1050/IT79231E-350-1155 Model

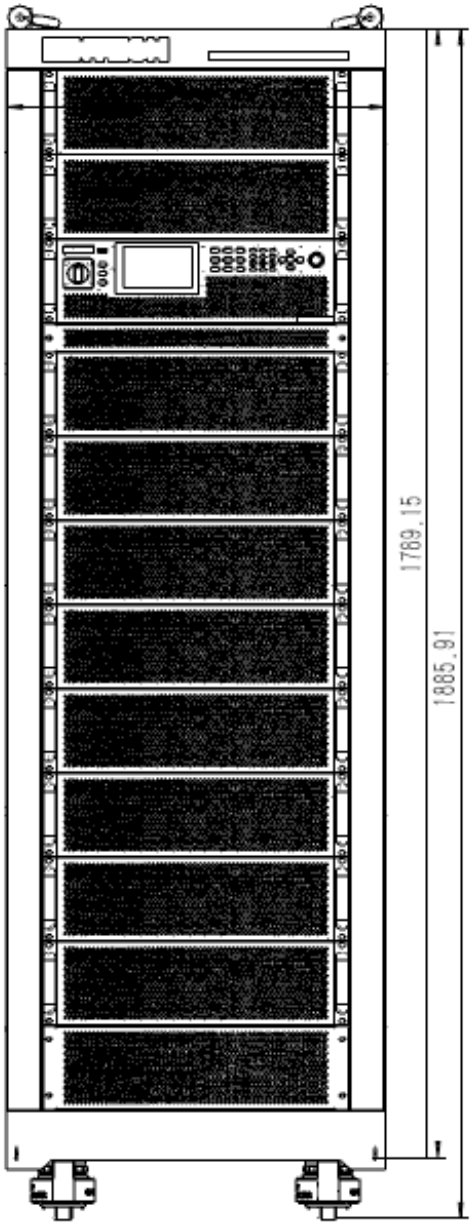

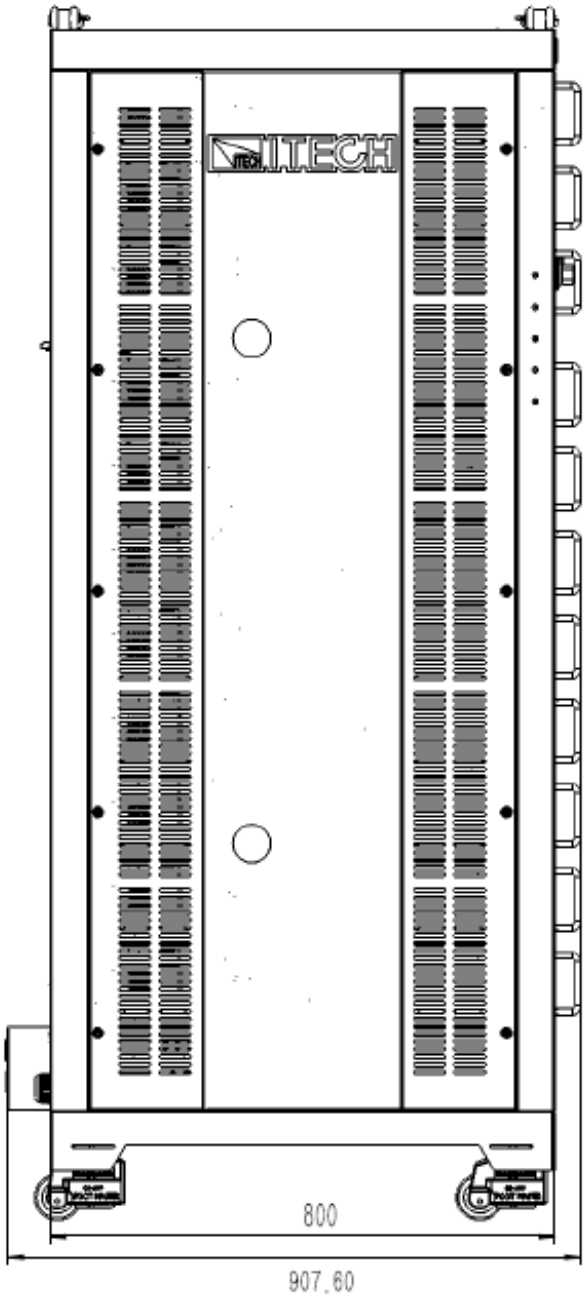

Chapter2 Instrument Introduction

2.1 Unpacking and Transportation

Unpacking

For cabinet products, they are packaged in wooden boxes at the factory. After you receive them, please refer to the unpacking instructions provided with the box for disassembly; for products packaged in cartons, please use appropriate tools for unpacking.

It is recommended to keep the complete transport packaging for the lifetime of the device for relocation or return to the manufacture for repair.

Transportation

If you need to transport non-cabinet products, you must pay attention to the following to ensure the safety of equipment and personnel.

CAUTION

- **Before moving, make sure that the cabinet or stand where the equipment will be placed has been fixed and meets the load-bear- ing conditions to avoid tilting and collapsing, causing personnel to be injured, and equipment broken.**
- **Due to the weight of the product, transport by hand should be avoided where possible. If unavoidable, carry it with two people and holding the product shell and not external parts (such as han- dles, electrodes, knobs, etc.).**
- **When carrying, be prepared to bear the weight to avoid sprains or being crushed by heavy objects.**
- **Use suitable safety clothing, especially safety shoes, when carrying the equipment, as due to its weight a fall can have serious consequences.**

After unpacking the cabinet product, if you need to move it to other places, you must pay attention to the following matters to ensure the safety of equipment and personnel.

CAUTION

- **The cabinet product is very heavy. Before moving to another loca- tion, confirm whether the ground load is in compliance.**
- **During the process of moving the cabinet, it is recommended that two or more people cooperate and push it slowly and at a constant speed. If you encounter a pit, you need to pay special attention. It is forbidden to push it quickly, otherwise it will easily cause excessive inertia and cause the casters at the bottom of the cabinet to jam and the cabinet to fall.**
- **It is not advisable to push down the slope to prevent the cabinet from falling down due to the shift of the center of gravity. It is rec- ommended**

to use a forklift or crane to move the cabinet.

- **ITECH 27U and 37U cabinets are equipped with hoisting rings as standard on the top. It is recommended to use a crane equipped with a four-leg hoisting belt structure for horizontal hoisting and moving, and ensure that the four hoisting belts are the same length to avoid cabinet skew during movement. As shown below.**
- **After moving to the destination, please lock the four casters to se- cure the cabinet.**
- **The cabinet should be placed on a level ground. It is forbidden to place the cabinet on a slopedground.**

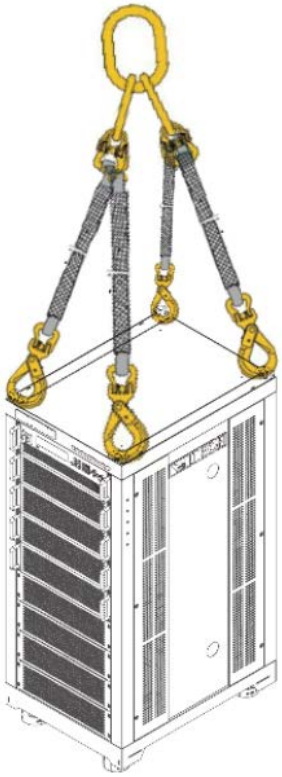

2.2 Verifying the Shipment

Open the package and check the articles within package box before operation. In case of any non-conformity, missing or appearance wearing, please contact ITECH immediately.

The package box should comprise:

Device name	Quantity	Model	Remarks
Programmable AC Power Supply	x1	IT7900 series	For the specific models included in this series, refer to 1.1 Brief Introduction.
Power Cord	X1	-	Number of the power cords vary depending on the model, See the Section 2.3 Connectiong the Power Cord for power cord connection.
USB cable	x1	-	Communication with PC.

LAN cable	x1	-	Communication with PC.
Calibration Certificate	x1	-	Test report before delivery

NOTE

After confirming that package contents are consistent and correct, please appropriately keep package box and related contents. The package requirements should be met when the instrument is returned to factory for repair.

The IT7930-350-180 model comes with a yellow optical fiber cable. The fiber cable need to install by yourself. For details, see 3.3 chapter.

2.3 Front Panel

The front panel of IT7900E is as shown below.

1 Power Switch
2 USB interface /Print/Trig/Menu
3 LCD touch screen
4 Function key
5 Number key
6 Up, down, left and right key and enter key
7 Rotary knob
8 Vent hole

2.4 Keyboard

The keyboard introduction of IT7900E series Power Supply is shown as follows.

Keys	Description
Print	Used for saving screen images
Trig	Used for manual trigger
Power	Power Switch
Menu	Used for going back to menu page
[Set]	Set the output voltage value

Keys	Description
[F-set]	• AC mode: set the output frequency • DC mode: **[F-set]** is invalid
Config	Enter to Configuration menu
	Basic metering key used for basic metering.
	Waveform Display key When this key is pressed, the waveform corresponding to current measurement data will be displayed.
	Harmonic Measurement key When this key is pressed, the harmonic measurement results and the menu of harmonic measurement parameter configuration will be displayed.
[On/Off]	Turn the power supply output on or off. When lit, indicates that the output is enabled or on.
Shift	Composite key, combined with other keys to realize functions marked above keys.
Esc	Press this key to exit the current operation interface.
[0]-[9]	Number key. Enter the number directly
+/–	Positive and negative signs
.	Decimal point
Left / Right Navigation keys	The left and right navigation keys are used to adjust the cursor to the specified position or scrolls pages to view menu items.
Up / Down Navigation keys	The up and down navigation keys are used to scroll page up and down to view menu items.
Enter	Operation confirmation key

Composite key **[Shift]**, combined with other keys to realize functions marked above keys. Firstly, press **[shift]** and the shift key will be lighted, and then press the function key, the detailed functions are listed as follows.

Keys	Description
[Shift]+[Set](List)	Enter the List function menu.
[Shift]+[F-set] (Sweep)	Enter the Sweep function menu.
[Shift]+[Config](Protect)	Enter the protection setting menu.
[Shift]+ (System)	Enter the System setting menu. Used to set the system parameters.
[Shift]+ (Surge&Sag)	Enter the Surge and Sag menu, used to Set the Surge/trapped Configuration.
[Shift]+ 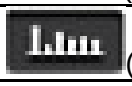 (Standard)	Enter the standard wave selection interface.
[Shift]+[1](Log)	Enter the data logging function menu.
[Shift]+ [2] (Lock)	Turn the keyboard lock on or off.
[Shift]+[3] (Local)	Switch remote control mode to local

Keys	Description
	control mode.
[Shift]+[4] (Save)	Save the common parameter settings.
[Shift]+ [5] (Recall)	Enter the Protect menu of the power supply.
[Shift]+ [6] (Hold)	When you need to keep the present meter status, you can press the keys. Then the present meter status display and will be kept no matter whether output is running.
[Shift]+ [7] (Help)	Obtain the help information.

2.5 Push-on Knob

The IT7900E series Power Supply provides a knob on the front panel as shown in the next figure.

The functions of the posh-on knob is described as follows.

- Adjust the value setting
- Select menu item
- Confirm the set value or the selected menu item

Adjust the Value Setting

In the value setting interface, rotate the knob clockwise to increase the set value and anticlockwise to decrease the set value.

Select Menu Item

The knob can also be used to view menu items. In the menu item display interface, turning the knob clockwise indicates that the next menu item is selected, and turning the knob anticlockwise indicates that the previous menu item is selected.

Confirm settings

After completing the value setting or selecting a menu item, pushing the knob acts like pressing **[Enter]** key to confirm the operation.

2.6 Rear Panel

The rear panel of the IT7900E series 3U model is shown below.

3U model rear panel illustration.

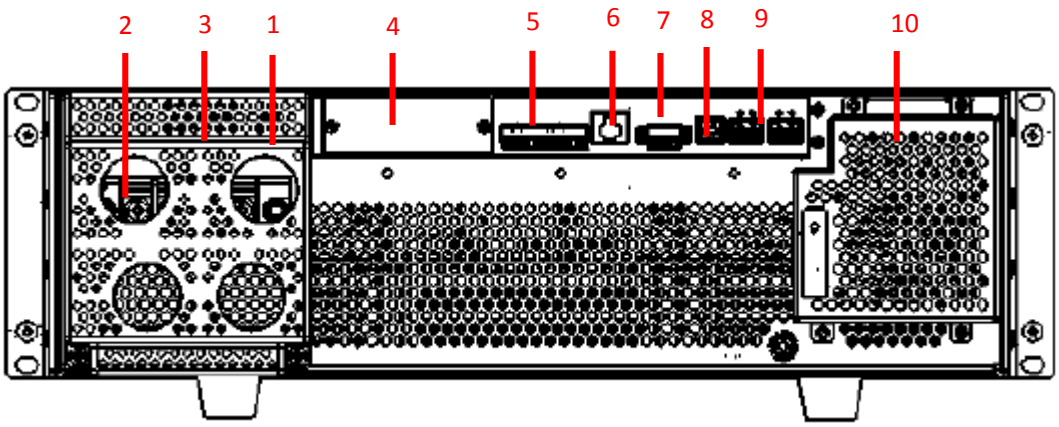

No.	Name	Description
1	ground terminal	Ground screw for making chassis ground connections.
2	Output terminals(M6)	AC or DC output terminals and chassis ground terminals, used to connect DUT.
3	Remote sense Terminals Output lock terminals and	SL+ and SN- are remote sense terminals, used for maximizing measurement accuracy.
4	Optional expansion slot	Optional interfaces: (Plastic plugs are inserted by default when the user does not purchase the interface.) The optional interface as follows: ● GPIB ● RS-232/ Analog interface
5	I/O terminals/CAN interface	Digital Port CAN communication interface CAN-H and CAN-L
6	LAN interface	LAN communication interface
7	External control interface CTRL	This interface is used for the parallel connection between the master (with operation panel) and the slaves (without operation panel). Connect the interface on the rear panel of each unit to be connected in parallel, and the master can offer synchronous control over the power-on/off of the slaves.
8	USB interface	USB communication interface.
9	system bus	Used for communication between instruments in parallel operation feature.

10	AC power input socket	Used to connect AC power to start instrument. No need to remove the protective cover, insert the cable connection directly from the left side of the protective cover. Port spacing is 10.16mm, screw M4 hole size.

The rear panel of IT7900E series 15U and above series cabinets are the same. Take IT7963E-350-315 as an example, the rear panel is introduced as shown below.

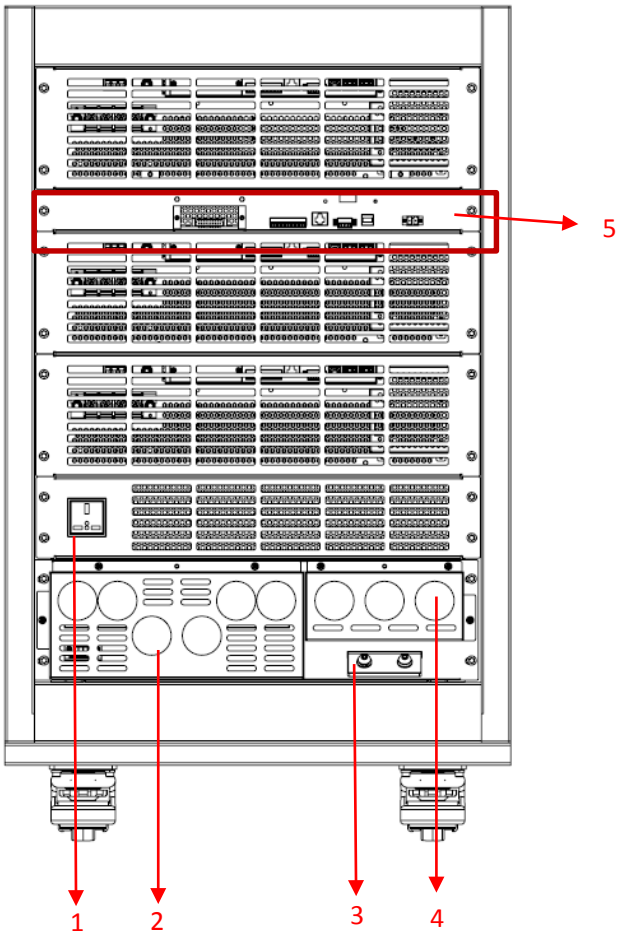

1: Output socket, which can be used when users need single-phase lower than 220V/10A power supply

2: Output terminals and protective cover, remove the protective cover to show ABCN terminals and sense terminals

3: PE terminal for output and input(Hole size M8)

4: Input terminal, connected to the instrument's power supply(Hole size M8)

The input and output panel are shown as follow:

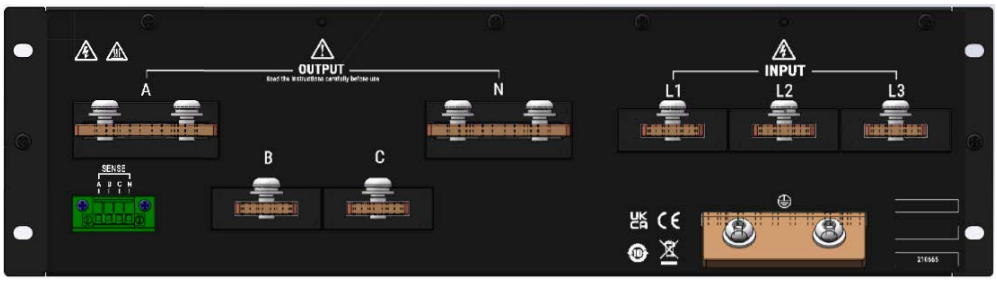

5: The communication interface for cabinet, the detailed diagram as follows, and the descriptions are the same as 3U model.

Chapter3 Installation

3.1 Connecting the Power Cord

Connect power cord of standard accessories and ensure that the power supply is under normal power supply.

Before connecting the power cord

To prevent electric shock and damage to the instrument, observe the following precautions.

WARNING

- Before connecting power cord, be sure to confirm that the power voltage matches with the rated input voltage of the instrument.
- Before connecting power cord, be sure to switch off the instrument. Verify that there is no dangerous voltage on the connection terminals.
- To avoid fire or electric shock, Make sure to use the power cord supplied by ITECH.
- Be sure to connect the power cord to the AC distribution box with protective grounding. Do not use terminal board without protective grounding.
- Do not use an extended power cord without protective grounding, otherwise the protection function will fail.
- Ensure that the power cord connection terminals are either insulated or covered by the supplied protective cover so that no accidental contact with lethal voltage can occur.

CAUTION

Safety agency requirements dictate that there must be a way to physically disconnect the AC mains cable from the unit. A disconnect device, either a switch or circuit breaker must be provided in the final installation. The disconnect device must be close to the equipment, be easily accessible, and be marked as the disconnect device for this equipment.

Connecting the power cord

The standard power cord specifications for this series of 3U instruments are divided into the following types according to different regions:

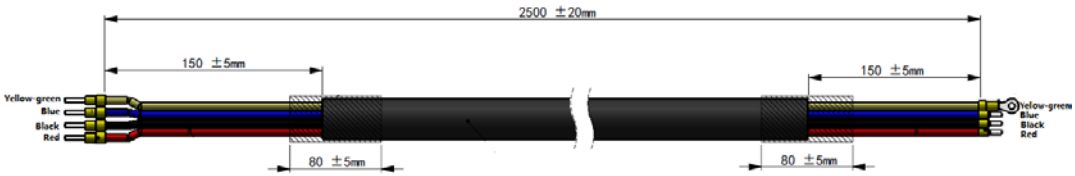

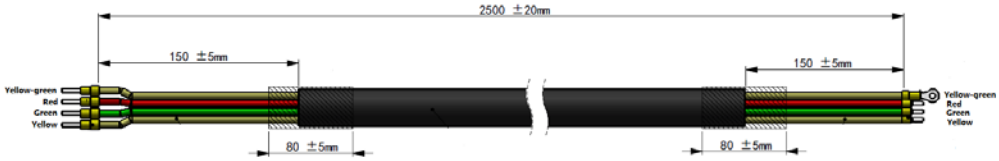

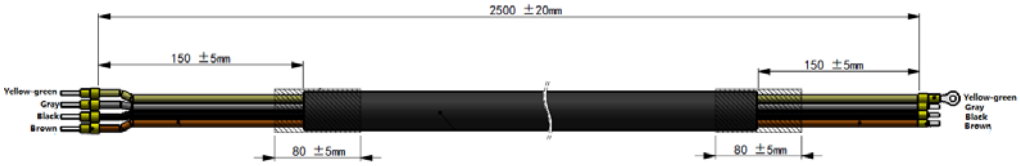

The yellow-green wire is grounding wire, which is connected to the PE terminal of power input on the rear panel; the others are live wires, which are correspondingly connected to the L1, L2 and L3 terminals of power input on the rear panel of the instrument.

NOTE

IT7942E-350-210 is standard equipped with two power cords.

AC Power Input Level

The AC input of all models is three-phase AC voltage (three-phase four-wire system).

- Input Voltage Level

  When the AC input voltage (VLL) is less than 240V, the output power will be derated to 60%, and when the output exceeds the present rating, the instrument occurs protection and the output is turned off. If a full power output is required, the AC input level Voltage (VLL) must be greater than 240V.

- Input Current Level

  Users are requested to use the maximum input current specification provided in the specifications when conditions are met. This current value provides a current margin while satisfying the maximum power output. If the user needs to calculate the exact current value under different input voltages, please use the following formula, and it is recommended that you also add current margin to this value. (The apparent power in the formula is the value at full power output. Different efficiencies at different output powers result in different apparent powers. Please refer to the maximum power and maximum efficiency when calculating.)

  AC Input Current (Per Phase) = (Apparent Power/3) / (V_{LL} /1.732)

  Taking the IT7921E-350-105 as an example, calculate the input current value for the input voltage of **380-10%**. At full power output, Apparent Power is **24.4kVA** in the specification.

  AC Input Current (Per Phase) = (24400/3)/((380-380*0.1)/1.732)=41.18A

Connecting the Power Cord

When connecting the instrument which rated power is 6kVA or above.

The AC input is three phase and balanced, connecting the power cord as below.

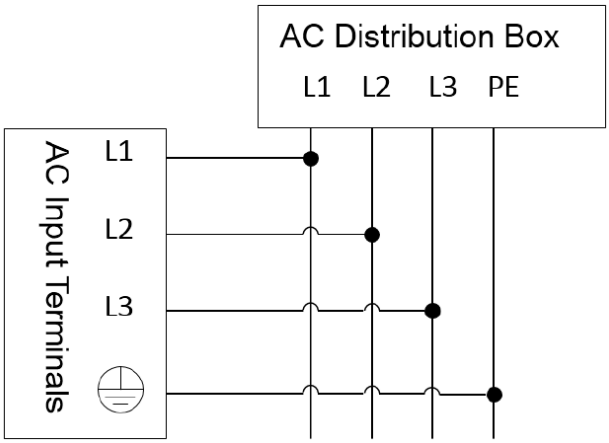

Connecting the power cord(for 3U unit)

1. Confirm that the switch of the AC power distribution box is off.
2. Confirm that the power switch is in the OFF position and verify that there is no dangerous voltage on the connection terminals.
3. Connect one end of the power cable's round terminal to the AC power input terminal on the instrument's rear panel.
   a) You only need to connect the red/green/yellow (or brown/black/gray) live wires to the terminals on the rear panel, which are not required to correspond to L1, L2 and L3 terminals one by one.
   b) The yellow-green wire is grounding wire, which is connected to the protective grounding terminal (PE).

4. Refer to the suggestion connection diagram, connect the other end of the power cable to the required AC distribution box.

Connect the two power cables of the IT7942E-350-210 to the power distribution box.

3.2 Connecting Test Lines (Optional)

Test lines are not standard accessories of the instrument. Please select optional red and black test lines for individual sales based on the maximum current value. For specifications of test lines and maximum current values, refer to

"**Specifications of Red and Black Test Lines**" in "**Appendix**".

WARNING

- Before connecting test lines, be sure to switch off the instrument. Power switch is in Off position. Otherwise, contact with output terminals in rear panel may cause electrical shock.
- To avoid electrical shock, before testing, please make sure the rating values of the testing lines, and do not measure the current that higher than the rating value. All test lines shall be capable of withstanding the maximum short circuit output current of the power supply without causing overheat.
- If several loads are provided, each pair of load wires shall safely withstand the rated short circuit output current of the power supply under full load.
- Always use test lines provided by ITECH to connect the equipment. If test lines from other factories are used, please check that the test line can withstand maximum current.

Specification for Test Cables

Test cables are not standard accessories for the instrument. Please select optional red and black test cables for individual sales based on the maximum current value. For specifications of test cables and maximum current values, refer to A.1 Specifications of Red and Black Test Cables for more information.

Connecting the DUT (Local Measurement)

The instrument supports two kinds of wiring methods with the DUT: local measurement and remote measurement (SENSE). The default test mode is local measurement.

NOTE

The T7942E-350-210 consists of two 15kVA in parallel mode. The output terminals and Remote sense terminals use the master interface. The wiring method is the same as other models.

Please confirm that the Remote Sense function in the menu is set to Off, otherwise the instrument will report an error in the present connection mode.

- The connection diagram of single phase is shown as follow:

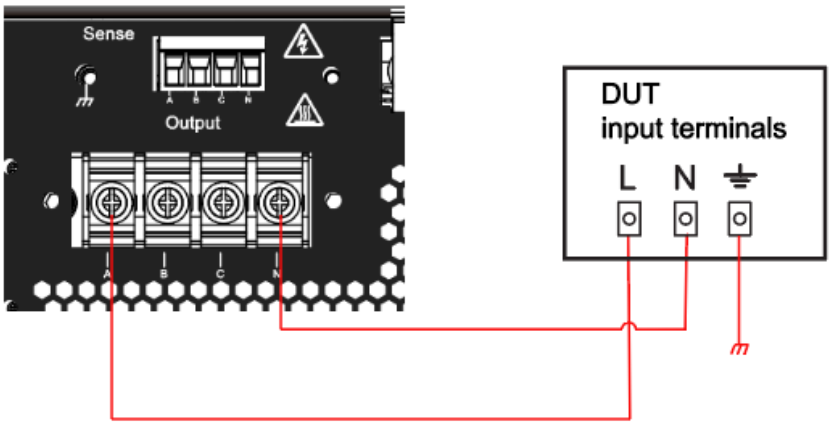

NOTE

When the output voltage has DC voltage, the output terminal L is positive, and N is negative.

- The connection diagram of three phase is shown as follow:

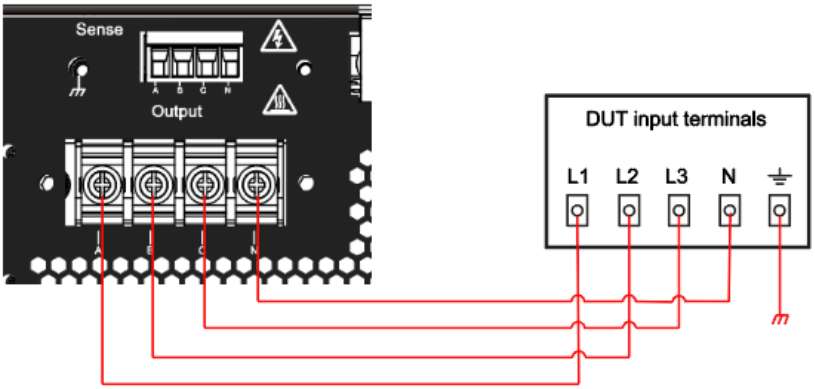

- The connection diagram of reverse phase is shown as follow:

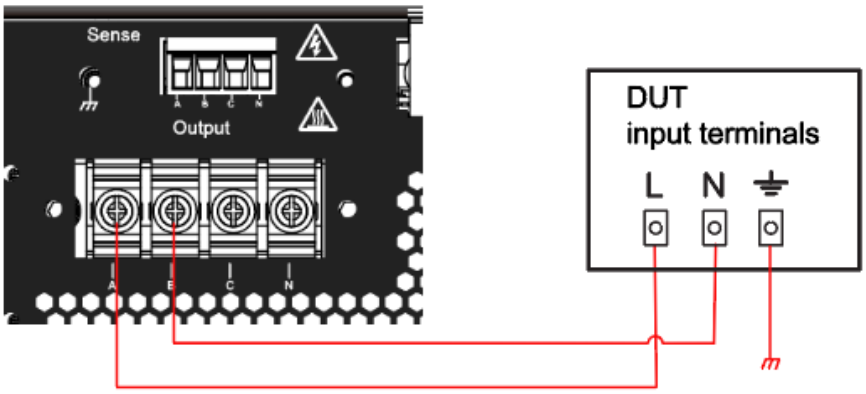

NOTE

When the output voltage has DC voltage, the output terminal A is positive, and B is negative.

1. Confirm that the power switch is in the OFF position and verify that there is no dangerous voltage on the connection terminals.
2. Remove the output terminals cover of the power system.
3. Loosen the screws of the output terminals and connect the red and black test cables to the output terminals. Re-tighten the screws.

   When maximum current that one test cable can withstand fails to meet the rated current, use multiple pieces of red and black test cables. For example, the maximum current is 1,200A, then 4 pieces of 360A red and black cables are required.
4. Thread the red and black test cables through the output terminals cover of the power system and install the cover.
5. (Optional) According to the actual situation of DUT, connect the grounding terminal on the rear panel of the instrument to the DUT to ensure the safe grounding.

   For the location information, see 1.5 Rear Panel Introduction.
6. Connect the other end of the red and black cables to the DUT. The positive and negative poles must be properly connected and fastened when wiring.

Connecting the DUT (Remote Sensing)

Remote measurement is available for the following scenarios:

When the DUT consumes large current or the wires are too long, there is a voltage drop on the wires between DUT and output terminals of the power system.

To maximize measurement accuracy, the power system provides the remote measurement terminals VS+ and VS- on the rear panel, which can be used to measure the terminal voltage of the DUT.

When the power system is used for battery testing in actual applications, the voltage drop of the wire will lead to voltage inconsistency of both ends and inconsistency of the cutoff voltage of power system and the actual voltage of battery, resulting in inaccurate measurement.

The connection diagram and steps of remote measurement are as follows:

NOTE

The T7942E-350-210 consists of two 15kVA in parallel mode. Connect the Remote sense terminals of master module. The wiring method is the same as other models.

- The connection diagram of single phase is shown as follow:

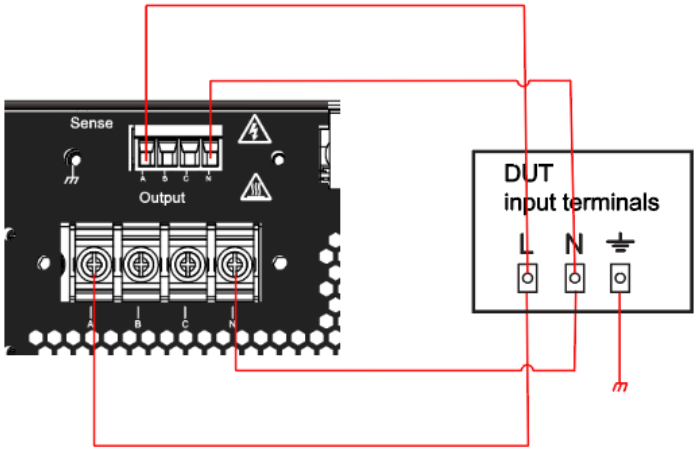

NOTE

When the output voltage has DC voltage, the output terminal L is positive, and N is negative.

- The connection diagram of three phase is shown as follow:

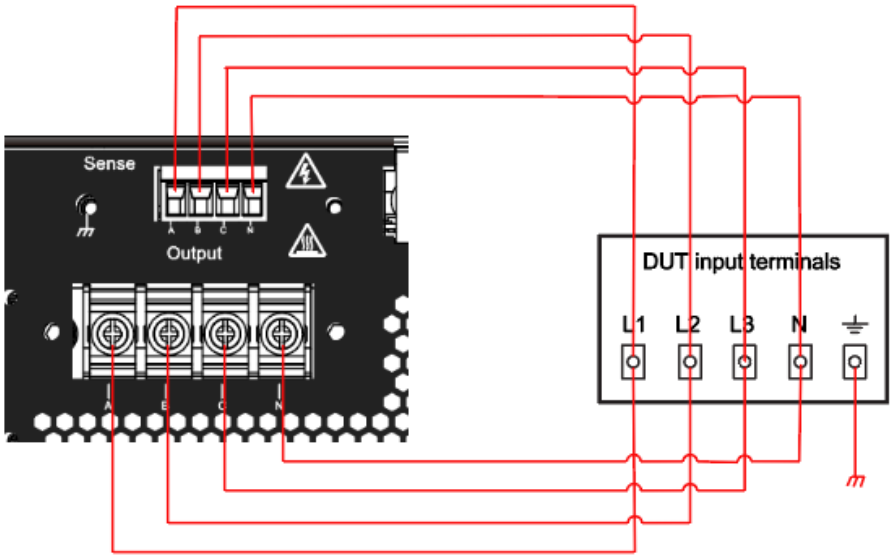

- The connection diagram of reverse phase is shown as follow:

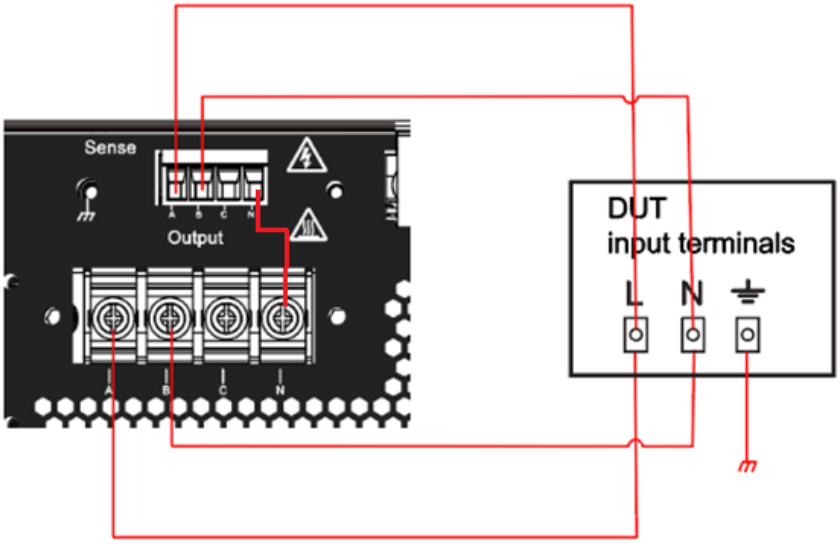

NOTE

When the output voltage has DC voltage, the output terminal A is positive, and N is negative.

1. Confirm that the power switch is in the OFF position and verify that there is no dangerous voltage on the connection terminals.
2. Remove the output terminals cover of the power system.
3. Refer to the wiring diagram and connect the Vs+ and Vs- with armored twisted-pair cables. Loosen the screws of the output terminals and connect the red and black test cables to the output terminals. Re-tighten the screws.

   When maximum current that one test cable can withstand fails to meet the rated current, use multiple pieces of red and black test cables. For example, the maximum current is 1,200A, then 4 pieces of 360A red and black cables are required.
4. Thread the red and black test cables through the output terminals cover of

the power system and install the cover.

5. (Optional) According to the actual situation of DUT, connect the grounding terminal on the rear panel of the instrument to the DUT to ensure the safe grounding.

   For the location information, see 1.5 Rear Panel Introduction.

6. Connect the other end of the remote sense cables to the DUT.
7. Connect the other end of the red and black cables to the DUT. The positive and negative poles must be properly connected and fastened when wiring.
8. Power on the instrument and turn on the Sense function of the instrument.

3.3 Installing Fiber Cables (Only for IT7942E-350-210)

IT7942E-350-210 model is composed of two 15kVA parallel machines. In order to avoid damage to the fiber cords connected in parallel with the master and slave during transportation, the fiber cords are not installed before delivery. After receiving the instrument, users need to install the yellow fiber cable by themselves.

CAUTION

- Before connecting the cables, ensure that the instrument power switch is off and the main switch of the AC power input (distribution box) is off.
- Fiber optic cables cannot be flexed or folded. When the cable is too long and needs to be arranged, gently wrap the cable in a circle and gently tie it.

As shown in the following figure, connect the System Bus between the master and slave by fiber cords.

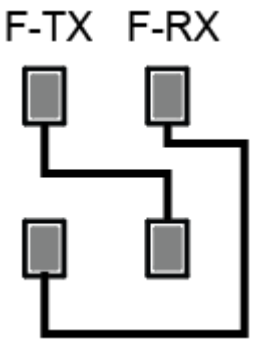

Chapter4 Getting Started

4.1 Power-on the Instrument

A successful selftest indicates that the purchased power product meets delivery standards and is available for normal usage.

Before operation, please confirm that you have fully understood the safety instructions.

Precautions

To prevent electric shock and damage to the instrument, please observe the following precautions.

WARNING

- **Before connecting power cord, be sure to confirm that the power voltage matches with the supply voltage.**
- **Before connecting power cord, be sure to switch off the instrument. Verify that there is no dangerous voltage on the terminals before touching them.**
- **To avoid fire or electric shock, make sure to use the power cord supplied by ITECH.**
- **Be sure to connect the main power socket to the power outlet with protective grounding. Do not use terminal board without protective grounding.**
- **Do not use an extended power cord without protective grounding, otherwise the protection function will fail.**
- **Ensure that the input electrodes are either insulated or covered using the safety covers provided, so that no accidental contact with lethal voltages can occur.**
- **If you notice strange sounds, unusual odors, fire, or smoke around or from inside the instrument, flip the POWER switch to the (O) side to turn the instrument off, or remove the power cord plug from the outlet. The detachable power cord may be used as an emergency disconnecting device. Removing the power cord will disconnect AC input power to the unit.**

CAUTION

Safety agency requirements dictate that there must be a way to physically disconnect the AC mains cable from the unit. A disconnect device, either a switch or circuit breaker must be provided in the final installation. The disconnect device must be close to the equipment, be easily accessible, and be marked as the disconnect device for this equipment.

Power Switch Introduction

User can adjust the power switch directly to turn on or turn off the instrument. The status of Power switch is as follows.

The switching knob of the IT7900 series power supply allows the user to turn the power on by 90° clockwise or to turn the power off by 90° counterclockwise.

Turning the POWER Switch On

Check that the power cord is connected properly.

Flip the POWER switch to the (ON) side to turn the instrument on. The front panel display will light up after a few seconds. It may take about 30 seconds or so for the power supply to initialize before it is ready for use.

If a self-test error occurs, an error message will be displayed in the front panel. Press the **[Esc]** button to try to clear the current fault status. The user can also restart the instrument to try to clear the fault status. Wait until the power is turned off and then start again. If the problem still cannot be solved after restarting, please contact the ITECH engineer.

Turning the POWER Switch Off

Flip the POWER switch to the (OFF) side to turn the instrument off. When it is turned off, the instrument interface will prompt “Power Down”, and the instrument will store the setting information before shutdown in the group 1 nonvolatile memory.

After you turn the POWER switch off, wait at least 10 seconds after the fan stops before you turn the POWER switch back on. Turning the instrument on too soon after you turn it off can cause damage to the inrush current limiter circuit, as well as reduce the life of components such as the POWER switch and the internal input fuses.

4.2 Home-Screen Overview

IT7900E series power supply adopts touch screen design, the users can easily operation by touch screen.

The power supply can work in either single-phase mode or three-phase mode. The working mode can be set in the system menu. The display interface of the instrument is different under different modes.

Single Phase Mode

The meter interface of IT7900E series power supply is shown as follow.

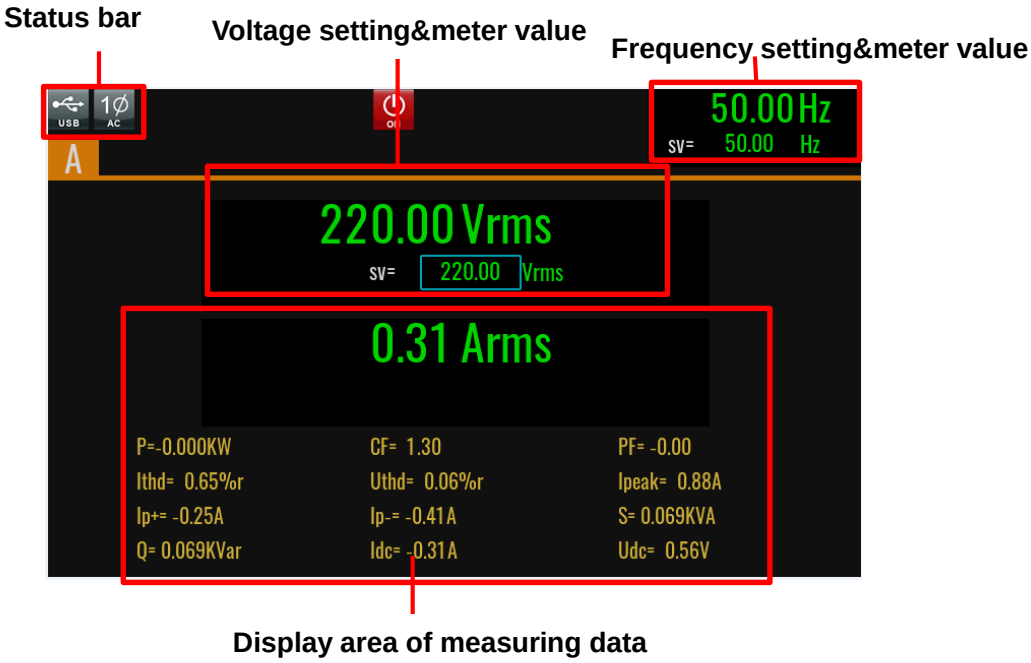

Three Phase Mode

The meter interface of IT7900E three phase mode is shown as follow.

The parameters are the same as the single phase.

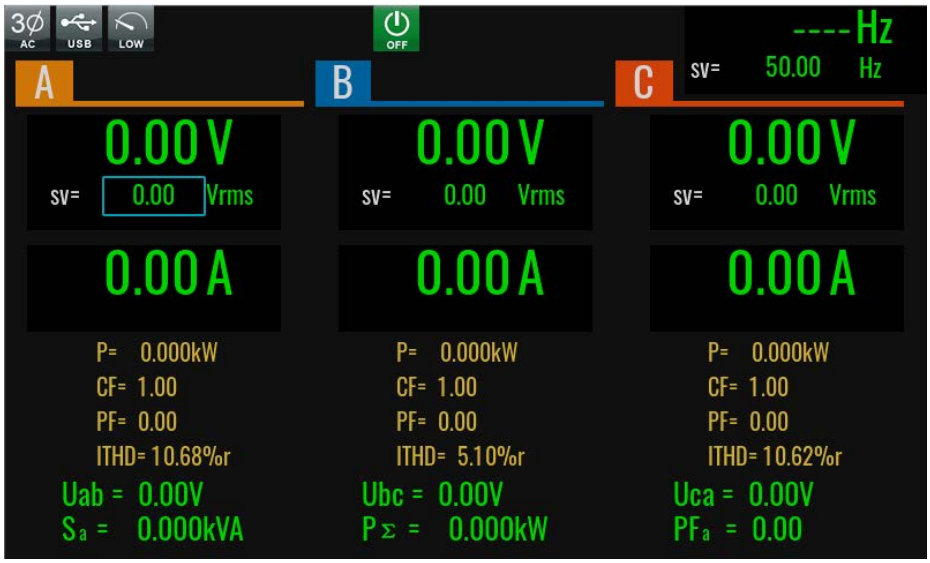

Under three-phase mode, display total parameters corresponding to Phase A, B and C, the user can switch screen and view the total parameters of each phase.

The meter interface of phase A is shown as follow, the display parameters are the same as single mode. You can click the A, B or C to switch the phase interface.

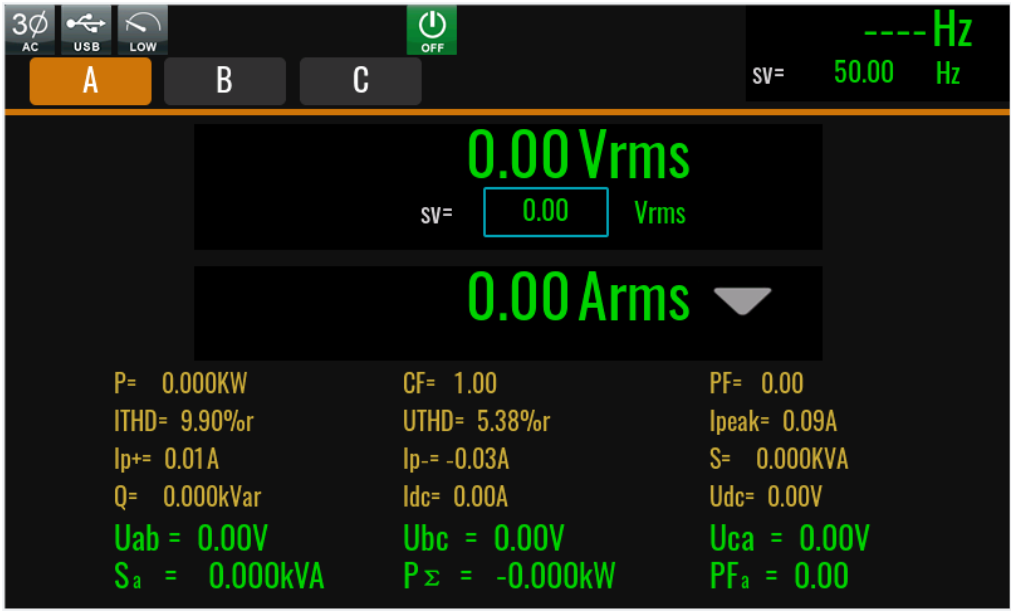

Introduction to Interface Symbols

The interface of IT7900E power supply will display the following symbols. All the symbols and description are listed in the table below.

Char	Function description	Char	Function description
Shift	Compound key	OFF	Output is off
ON	Output is on	LOCK	Key operation is locked
1Ø AC	Single phase AC mode	3Ø AC	Three phase AC mode
1Ø DC	Single phase DC mode	3Ø AC+DC	Three phase AC+DC mode
AC	Split phase AC mode	DC	Split phase AC mode
AC+DC	Split phase AC+DC mode	DC+AC	Split phase DC+AC mode
1Ø DC+AC	Single phase DC+AC mode	1Ø AC+DC	Single phase AC+DC mode
AC	Multi-channel AC mode	AC+DC	Multi-channel AC+DC mode
DC	Multi-channel DC mode	DC+AC	Multi-channel DC+AC mode
REM	The AC source is in remote mode	SAG	Surge&Sag function indicator
ANALOG	External Simulation Test Function	LOG	Record log

Char	Function description	Char	Function description
LIST	LIST is running	LIST	LIST is finished
LIST	LIST function is waiting for trigger	SWEEP	Sweep function is waiting for trigger
SWEEP	Sweep running indicator	USB	Found USB disk
SENSE	Sense indicator	SENSE	Sense Error
OV	Over voltage protection	OTP	Over temperature protection
PEAK	AC/AC+DC mode Peak OCP	RMS	AC/AC+DC mode RMS OCP
POWER	Over power protection	FIBERS	Fiber is error
SYNC	SYNC unlock	SYNC	SYNC lock
NEGATIVE	Current Negative	V SAMPLE	Voltage sample mode

Menu Introduction

Press the **[Menu]** key on the front panel and enter to the menu interface. Menu interface will display all of function icon, user can rotate the knob or direction key to select, or click the screen to enter the function interface.

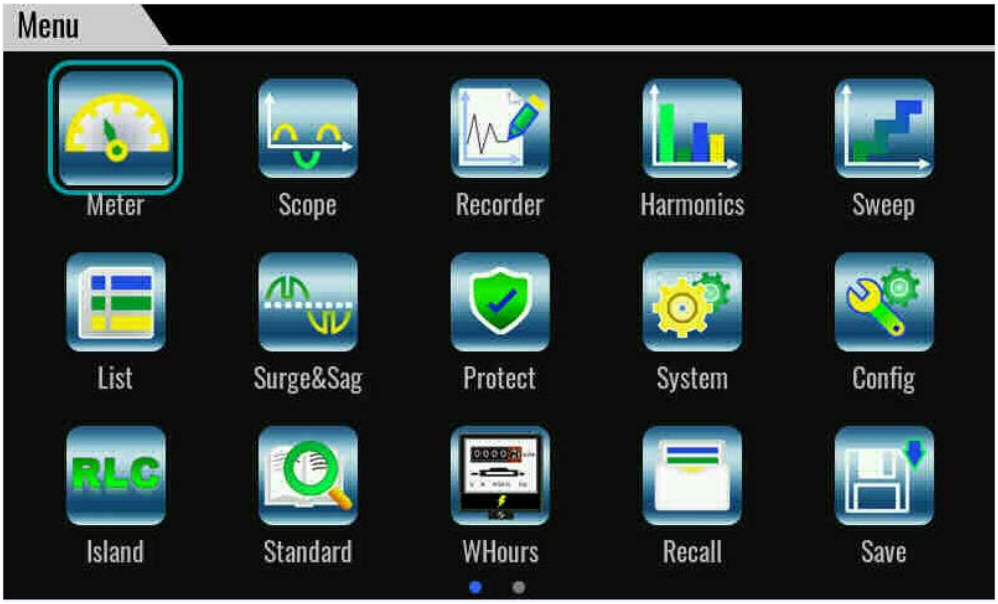

4.3 Touch Screen Introduction

This series of power display is a touch screen LCD interface, users can select and set parameters by hand touch.The touch function can be set in the system menu.

Touch screen drag and corresponding functions are described as below. Convenient user quickly understand how to use this power supply.

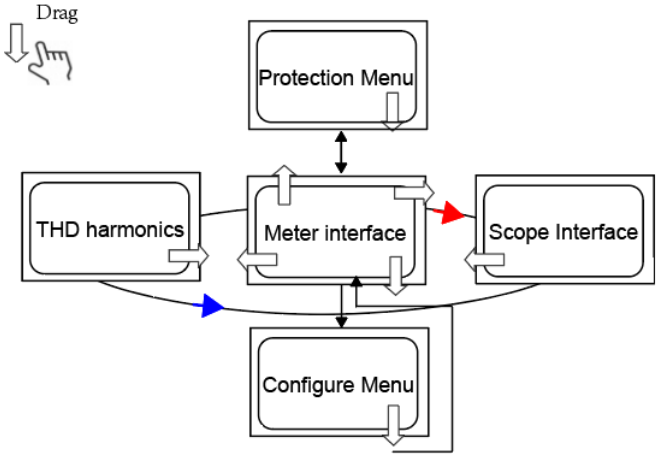

4.4 Set output parameters

The voltage value and frequency value can be programmed, which can be set to different parameters within the specification range based on customer requirements. This can meet various test requirements of the customer.

After the user presses the V-set or F-set keys on the front panel, the instrument interface displays the parameters to be set and the cursor flashes for prompt. The user can use the following methods to set the values.

- Directly use the number keys to set the value.
- Rotate the knob to set the data in the cursor position. Rotate the knob lockwise to increase the set value and anticlockwise to decrease the set value. Once the data in the cursor position increases to ten, the value will add one to the front position automatically. and once the data in the cursor position decreases to zero, the value will minus one from the front position automatically. This provides convenience for the user to set. The knob can works with the left or right keys. Use the left or right keys to move the cursor position.

NOTE

After entering the menu interface, the knob can also be used to scroll pages to view menu items.

4.5 Output On/Off Control

WARNING

- The **[On/Off]** key is used to turn the output on or off under normal circumstances. Even if the instrument is in control by PC or the keyboard is locked, the **[On/Off]** is still valid.
- The [On/Off] key light is off and turning the output off does not place the instrument in a safe state. Hazardous voltages may be present on all output and guard terminals. Putting the equipment into an output-off state does not guarantee that the outputs are powered off if a hardware or software fault occurs. See the cautions about connecting the test lines before connecting test lines.

Controlled by the [**On/Off**] key

You can press the **[On/Off]** key on the front panel to control the output status of the power supply. If the **[On/Off]** key light is on, indicates that the output is turned on. The VFD displays the meter value such as voltage, current, power and so on. If the **[On/Off]** key light is off, indicates that the output is turned off. The VFD displays that the power supply state is OFF.

Note

It is recommended that you turn on the [On/Off] after the power supply is connected to the DUT. If the power supply has no output after the output is turned on, check the voltage and current setting value, set the voltage and current to a non-zero value, and then turn on the output.

Controlled by remote command

When communicating remotely, the [**On/Off**] switch of the power supply can be controlled by using the corresponding SCPI command, as detailed in the programming guide. For example, use OUTP 1 to turn on the power output and OUTP 0 to turn off the output.

Controlled by Digital IO pins

The Digital IO-1 pin, which comes standard with this series of instruments, supports external level/pulse signal control output, and in combination with external circuitry, enables emergency stop control of the output. Refer to the following use case.

Digital IO-1 with the function of inhibit output, can disable the output by inputting low level (0V) to IO-1 in the default setting. at which time the [**On/Off**] key light is on and there is no actual output. Restoring a high level (5V) on IO-1 restores the output on.

1. Go to the System→I/O menu.
2. Select the Digital IO-1:Remote Inhibit Output items, and setup the configurations.

- Reverse: set to Off it means the valid signal is low level (0V).
- Function: set to Inhibit-living it means when input an inhibit signal and the instrument output is inhibited. When the input signal undoes, the output returns to normal.

3. Connect Pin 1 (positive) and Pin PE (negative) of Digital IO to the external signal as follows:

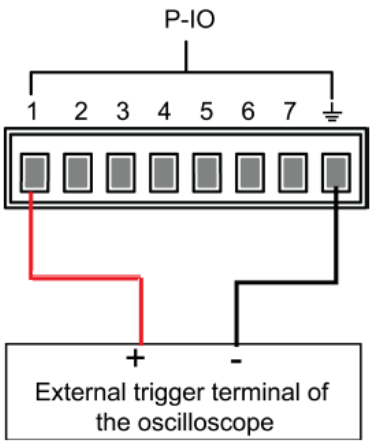

At this time, 5V is output between Pin1 and Pin PE.

4. After connecting the DUT, turn on [**On/Off**] button.
5. Input 0V to Pin1 (positive) and Pin PE (negative), or directly short Pin1 and Pin PE.At this point, output is disabled.
6. Input 5V to Pin1 (positive) and Pin PE (negative), or disconnect the short wire between Pin1 and Pin PE. At this point, output is restored.

Chapter5 Operation and Application

This chapter describes operations of the keys on the front panel of the AC power supply. The AC power supply must be in the local mode when controlled by the front panel. The default mode is the local mode after the AC power supply is turned on. In the local mode, the user can enable all functions of the power supply through the front panel.

5.1 full 4-Quadrant output character

The IT7900E series represent the newest generation of programmable, full four-quadrant grid simulators with full 100% of current rating in both source and sink mode, and provides energy recovery capability. The power generated by the DUT during the test can be easily retuned to the AC grid, rather than being dissipated as heat. which protects the environment and lowers the cost of operation. It can be applied to the applications in testing grid-tied products that inject energy into the grid, such as the frequency changes, voltage transients and DC injection of grid-tied/off-grid inverters testing.

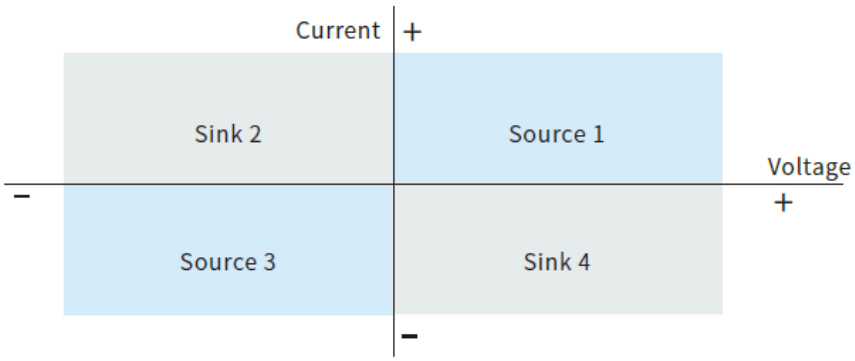

The relationship between output voltage, current, power and frequency is shown in the figure below.

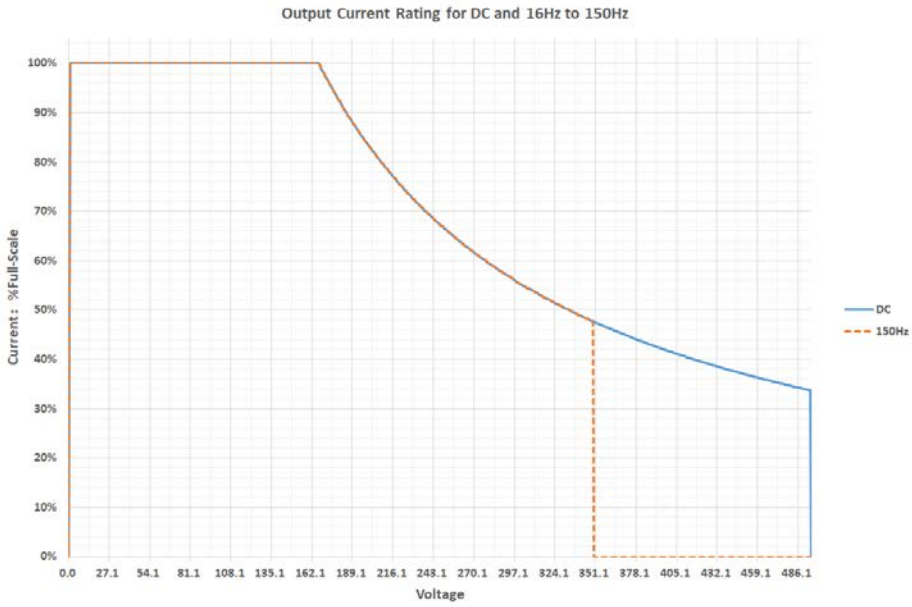

5.2 Select the Power Supply Mode

The IT7900E series provides multiple modes such as single-phase, three-phase, reverse phase and multi-channel, which can be selected by the user through the panel menu.

Under the reverse mode, the rated voltage will be extended to 200%.

The multi-channel function allows users to test 3 independent DUT at the same time without adding additional hardware configuration.

The operation steps are as follows.

1. **Press [Shift]** + (System) enter to system menu.
2. Under the Source setting interface, touch the screen or rotate the knob to select the **Phase** and set the power supply phase mode.

Single Phase

Under the single phase, the power supply works as a single phase power supply. the output mode can be set to AC/DC/ACDC/DCAC.

Three Phase

Under the three phase mode, the power supply works as a three phase power supply. the output mode can be set to AC/ACDC.

Reverse Phase

Under the reverse phase, the power supply works as a single phase power supply, and the rated voltage will be extended to 200%. For example, AC power supply rated voltage is 350V, under the reverse phase mode, the reted output voltage is 700V. And the output mode can be set to AC/DC/ACDC/DCAC.

5.3 Select the Output Mode

The IT7900E series has four output modes: AC, DC, AC+DC, DC+AC. It not only provides pure AC/DC output, but also can use AC+DC and DC+AC output modes to realize "AC output plus DC bias" And "DC output waveform with ripple", which cover a wider range of applications.

The output mode can be select in the system menu.

1. **Press [Shift]** + (System) enter to system menu.
2. Under the Source setting interface, touch the screen or rotate the knob to select the **[Output couple mode]** and set the output mode.

5.3.1 AC Output Mode

If the output mode select to AC Mode, the instrument will simulate AC power supply. The default set of IT7900E series power supply is AC Mode.

Set the output parameters of the power supply in the main interface, including the output voltage, output frequency.

- Press up/down keys to select setting value and then press **Enter** to confirm.
- Rotate the knob to select setting value and then press **Enter** to confirm.
- Touch screen and then press **Enter** to confirm.

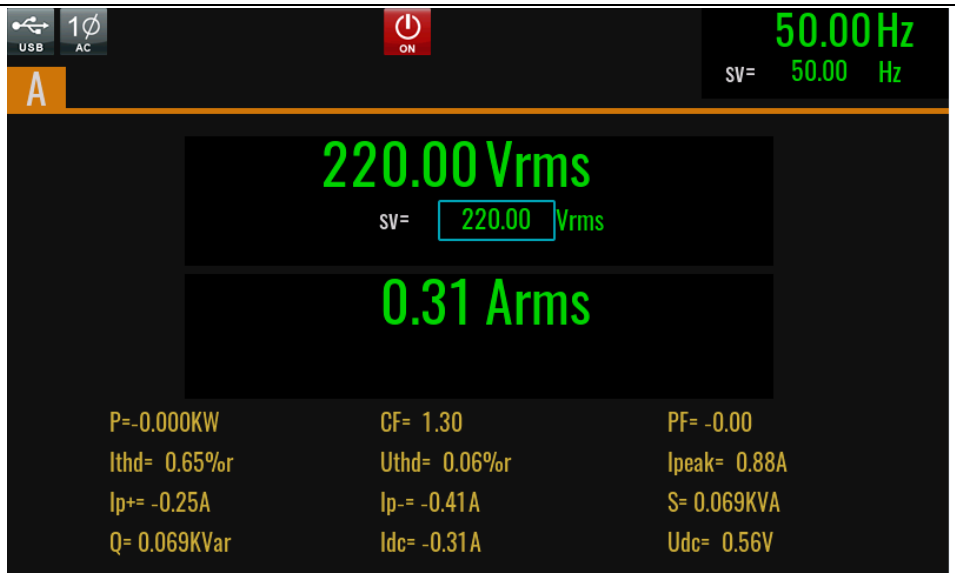

5.3.2 DC Output Mode

If the output mode select to DC Mode, the instrument will simulate DC power supply. Set the output voltage and current of the DC power supply in the main interface, as shown in the figure below.

- Press up/down keys to select setting value and then press **Enter** to confirm.
- Rotate the knob to select setting value and then press **Enter** to confirm.
- Touch screen and then press **Enter** to confirm.

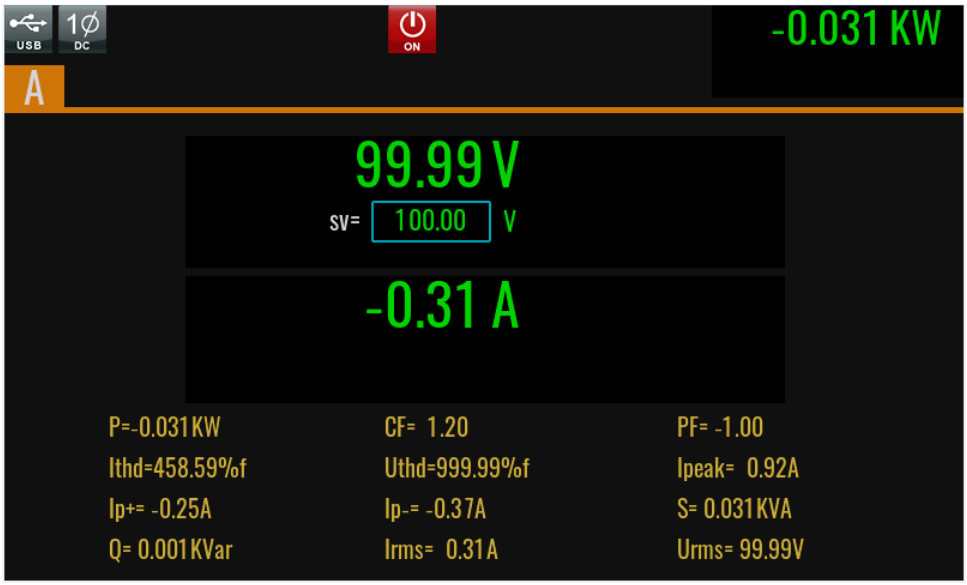

NOTE

When using DC mode for testing, please first understand the ripple parameters of the instrument. If there are strict noise requirements, additional DC noise filters are needed to obtain low noise and good stable DC voltage for testing.

5.3.3 AC+DC Mode

If the output mode select to AC+DC Mode, the instrument will simulate AC and DC power supply, which can add DC component to AC voltage. Set the output voltage in the main interface, as shown in the figure below.

Under AC+DC mode, Set the output voltage and frequency of the AC power supply in the main interface, and set the DC voltage in the configure menu.

Vac: you can set the Vac under the main interface or under the config interface.

DC: set the DC component under the config interface.

NOTE

The AC + DC mode not only expands the application range of pure AC voltage, but also expands the application range of DC component in laboratory testing.When using AC+DC for testing, please first understand the ripple parameters of the instrument when it is used as a DC power supply. If there are strict noise requirements, additional DC noise filters are needed to obtain low noise and good stable DC voltage for testing.

5.3.4 DC+AC Mode

If the output mode select to DC+AC Mode, the instrument will simulate DC and AC power supply, which can add AC component to DC voltage. Set the output voltage in the main interface, as shown in the figure below.

Under DC+AC mode, Set the Vdc in the main interface, and set the Vac in the configure menu.

Vdc: you can set the Vdc under the main interface or under the config interface.

Ripple control: set the wave,Vac component and frequency under the config interface.

NOTE

When using DC mode for testing, please first understand the ripple parameters of the instrument. If there are strict noise requirements, additional DC noise filters are needed to obtain low noise and good stable DC voltage for testing.

5.4 Current Limit Mode and Power Limit Mode

The IT7900E series power supply defaults to constant voltage CV output mode. The output voltage can be set in main interface.

When the actual current value is higher than the setting current limit value, power supply works in current limit mode, and output voltage will be reduce.

When the actual power value is higher than the setting power limit value, power supply works in power limit mode, and output voltage and current will be adjust.

The current limit value can be set in the Protection menu. Refer to 6.6 Protection Function for detailed setting methods.

NOTE

Current limited or power limited operation mode is only valid when pulling load with constant resistance, please contact ITECH engineer for other test situation.

5.5 Professional Anti-islanding Test Mode

The IT7900E series provide a professional anit-islanding test mode. Users can adjust RLC parameters or configure the parameters of active power and reactive power to simulate islanding status between inverter and load when the main network is off, and verify the anti-islanding protection response time of grid-tied DUTs under different equivalent impedances, three-phase load balancing and non-balancing conditions.

The solution helps engineers to simplify the test circuit and cost savings of additional equipment such as oscilloscopes and power meters.

1. Click the RLC function in Menu interface and enter to islanding simulator function.

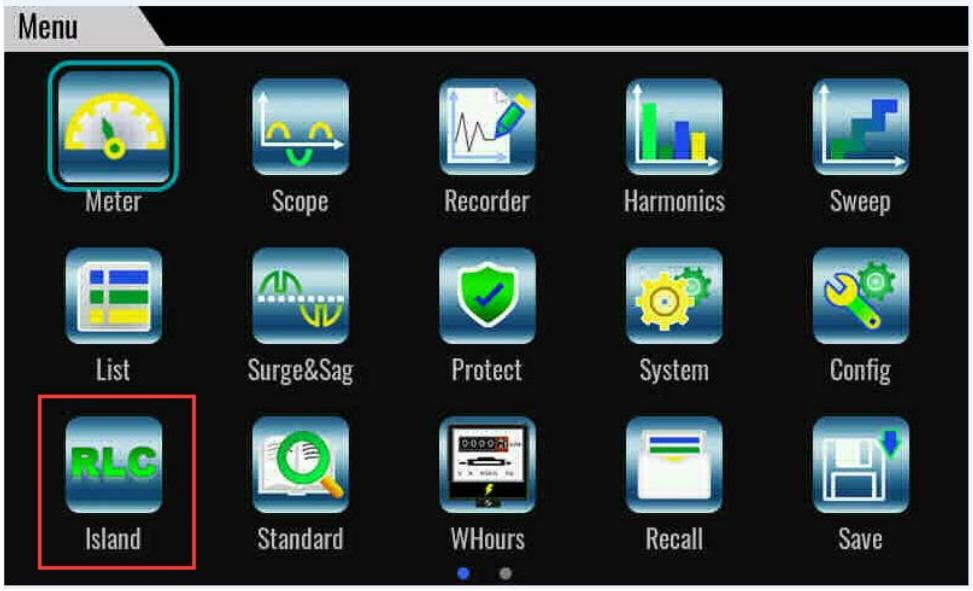

2. Select the mode.

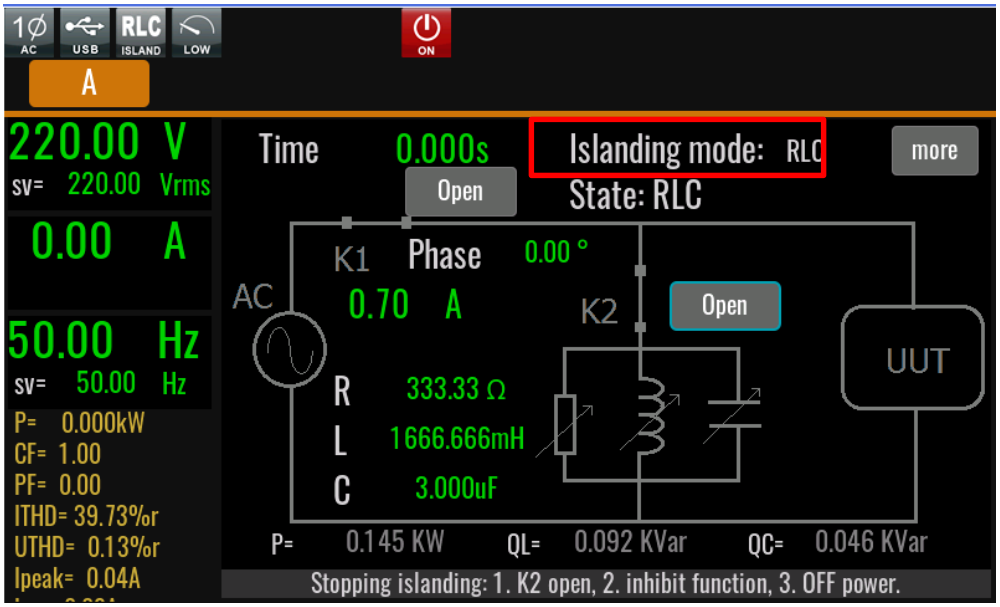

- PQ mode: configure the parameters of active power(P), reactive power Q_L and Q_C.
- RLC mode: configure the parameters of R, L, C.

3. Set the Phase, it means the output stop phase angle when close the K1 switch.
4. Users can click **More** to enter the menu setting interface to set the test method.

The IT7900E Grid Simulator provides two end-of-island state detection methods:

- The Inhibit control enable parameter is set to Enable, the inverter outputs a signal after it is turned off, and the IO-1 pin of the IT7900 grid simulator receives the signal and ends the islanding simulation state, the K1 and K2

switches are disconnected, and the On/off switch is turned off. This stopping method requires that the inverter has the function of outputting a signal after disconnection. The inverter output signal is connected to the IO-1 pin and set to the default function.

- The other is to set the detected parameter information in A/B/C Phase. IT7900E Grid simulator detects that the input voltage/current/power is less than the set value, then it ends the islanding simulation state, the K1 and K2 switches are disconnected, and the On/Off switch is closed.

5. Close the K2 switch, connecting the load and UUT, and then close the K1 switch, power on the UUT.
6. Open the K1 switch, enable the islanding status. Test the anti-islanding protection response time, The interface will display the running time value in the island state.

   After the K1 switch is disconnected, the machine can output a voltage signal externally as a reference point for the island start time, this signal needs to be connected to the IO-6 pin to get it, and the pin function is defined as Trigger1-out.

5.6 Waveform Selection

The user can set the output waveform in the config menu of IT7900 series power supply. Eight output waveforms below are available, user can select the waveform in **Config->Waveform** menu.

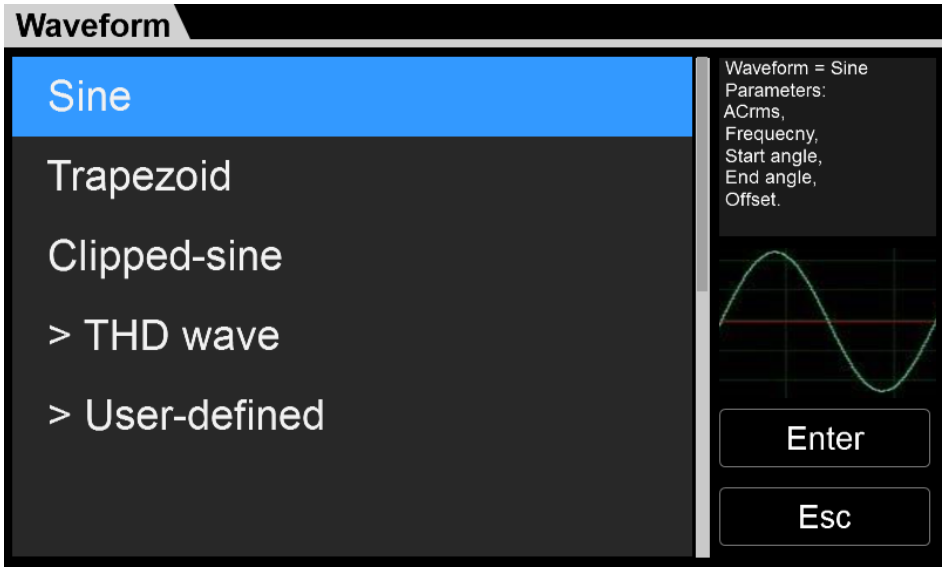

- Sine
- Square
- Sawtooth
- Triangle
- Trapezoid
- Clipped-sine
- Rectifier
- THD wave
- User-defined

When **Trapezoid, Clipped-sine**, **Rectifier, THD Wave and User-define** are selected, the user should configure the parameter of waveform.

5.7 Full 4-Quadrant Power Amplifier

The IT7900E series regenerative grid simulator can be used as a power amplifier to complete power hardware in the loop (PHIL) applications for microgrids, energy storage and new energy vehicles. The digital I/O or a standard suite of analog signal can be input via an external analog interface (optional) and then amplified without distortion to a real power waveshape.

The power amplification function can only be realized by selecting external analog interface. Please refer to the Analogue function in 6.11 for the specific use method.

5.8 Auto-range Function

IT7900E series power supply can achieve the combined output of multiple voltage and current at a fixed power. Single power supply can meet different DUT tests with high voltage low current or high current low voltage, at the same time, because the output of voltage and current is controlled by the limit power, it will show the switching of voltage and current auto ranging. To avoid Intermittent output shutdown when switching the high range and low range.

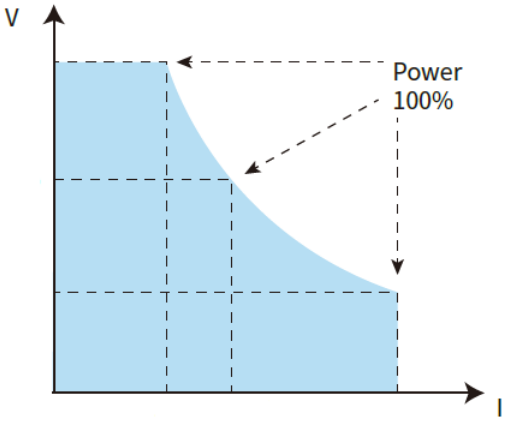

I-V Curve Graph

5.9 Programmable Output Impedance

The function of programmable output impedance allows user to edit the output R and L so as to simulate the impedance of the AC grid.

5.10 Sweep Function

The Sweep function is used to test efficiency of switching power supply and capture the voltage and frequency at the maximum power point. The voltage and frequency of power may be altered in the form of step ladder by setting the initial voltage, final voltage, step voltage, initial frequency, final frequency, step frequency and one-step time. As the test closes, voltage and frequency at the maximum power point may be displayed. Sweep function is not applicable under DC mode and DCAC mode.

The Sweep function is not supported in multi-channel mode.

Operating steps

1. Press **[Shift] + [F-set]**(Sweep)on the front panel to enter the sweep interface, as shown in the figure below.

2. Set the voltage and frequency parameters in the sweep interface.

   Parameters in the sweep interface are described as follows:

Parameter	Explain
Start voltage	Set the starting voltage.
Stop voltage	Set the ending voltage.
Step Voltage	Set the step voltage.
Start freq	Set the starting frequency.
Stop freq	Set the ending frequency.
Step freq	Set the step frequency.
Step time	Set the step time.
Mode	Set the sweep mode. Time: Time Sweep Mode Trig: Trigger mode Time-back-forth: Step switching according to time and scanning back and forth. Trigger-back-forth: Step switching according to trigger and scanning back and forth.
Priority	Priority setup Volt-Priority Freq-priority Volt&Freq
Waveform	Select sweep waveform Sine Square Sawtooth Triangle Trapezoid

Parameter	Explain
Finish	Set the running state after the sweep execution is finished: • off: Directly off the output after the execution is finished; • Last: Keep the last waveform unchanged after the execution is finished. • Normal: return to normal mode after the sweep execution is finished.
Trig source	Select the Trigger source: Manual BUS Trigger1 Trigger2

3. Press **[On/Off]** on the front panel and enable the output.
4. Press **[Run]** on the Sweep interface, Then the running status will be displayed on LCD. Output parameters and measurement parameters are displayed on the left side of the Sweep interface. You can also press the Meter to observe the output parameters in the main interface.
5. After sweeping, **[On/Off]** on the front panel will be off, and status will be displayed on LCD. You can press **[Stop]** on the Sweep interface to stop the Sweep function.

5.11 Standard IEC Regulations

IT7900E series AC/DC power supplies provide standard test curves in accordance with IEC 61000-4-11/4-13/4-14/4-17/4-27/4-28/4-29 regulations. It can be invoked directly by the user when testing IEC compliance tests.

This function provides both the test curve that meets the standard requirements of regulations and the curve customization function. Users can customize the curve according to the project requirements of regulations and perform the extended test of the test object.

Click Standard on the Menu screen directly press Shift+ (Standard) to enter the regulation test screen.

NOTE

For parameters of corresponding curves and related regulations, refer to IEC standards.

Interface Instruction

Take IEC 61000-4-11 as an example to introduce the interface display and how to use the regulation test.The usage method of other regulatory interfaces is the same, but the displayed parameters are different.

Standards Selection Area

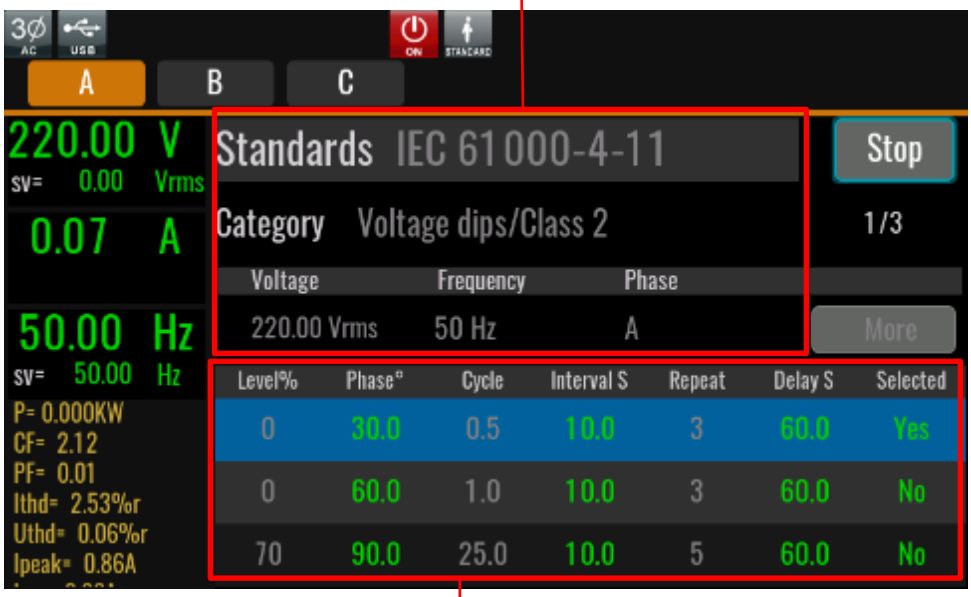

Standards Edit Area

- Standards Selection Area

  In the Standards selection area, users can select the regulation to be tested. Each option is described as follows:

Standards	Select the regulations to be tested. the following regulations are supported: ● IEC 61000-4-11 ● IEC 61000-4-13 ● IEC 61000-4-14 ● IEC 61000-4-28
Category	Test items defined by standard regulations.The third class projects are divided into several sub-projects according to the requirements defined by regulations, and customers select them according to the level of needs. Voltage dips short interruptions Voltage variations
Voltage	Voltage value of AC output. User can setting the voltage level according to the DUT requirements.
Frequency	Frequency value of AC output. Different regulatins have different definitions. This parameter can be set only for User defined categories.

Phase	Select the phase to execute the test. If not selected, the test as defined by the regulation will not occur.

- Standards Edit Area

  If you select different regulations, the execution items and parameters in the regulation editing area are different. You can edit parameters such as the start Angle of test execution. The parameters displayed in green on the page can be modified.
  This section uses IEC 61000-4-11 as an example to describe the regulatory parameters. For other regulatory parameters, see the regulatory documents.

Level %	Level of test items defined by the regulation.
Phase	The starting phase Angle position of the A-phase waveform output. For three-phase mode, the Angle difference between PHASE B and A is 120°, PHASE C and A is 240°
Cycle	The number of continuous periods for maintaining the drop voltage, According to regulations, different test items have different cycles.
Interval	The interval time of test, from the beginning of the drop to the recovery of normal operation. Unit: second (s)
Repeat counts	Repeat number.
Delay	Time delay, the time interval between test items. Unit: second (s)
Selected	Test item selection: Select to Yes, indicates the test item will be executed. Select to No, indicates the test item is not executed.

- Configure

  Click Configure to enter the configuration interface of other parameters, and set the Rise time and Fall time.

- Run/Stop

  running or stopping the regulation tests. You must enable the output before running. Otherwise, a message is displayed indicating that the output is not enabled.

IEC 61000-4-17 Instruction

The IEC 61000-4-17 standard is ripple immunity test program to test the electromagnetic compliance of electrical equipment. To perform the IEC 61000-4-17 test, a test power supply applies a DC voltage with ripple to the DUT and completes the established test at a nominal, high or low DC voltage level to verify that the DUT meets the test criteria.

1. Set the instrument to DC+AC mode, enter system->Source menu, set the instrument to Voltage Source operation mode and DC+AC output mode, otherwise you can't see the IEC 61000-4-17 regulation options when you enter the regulation interface.

2. Users can click Standard in the Menu screen to enter the Regulatory Test screen, or press Shift+ (Standard) directly to enter the Regulatory Test screen.

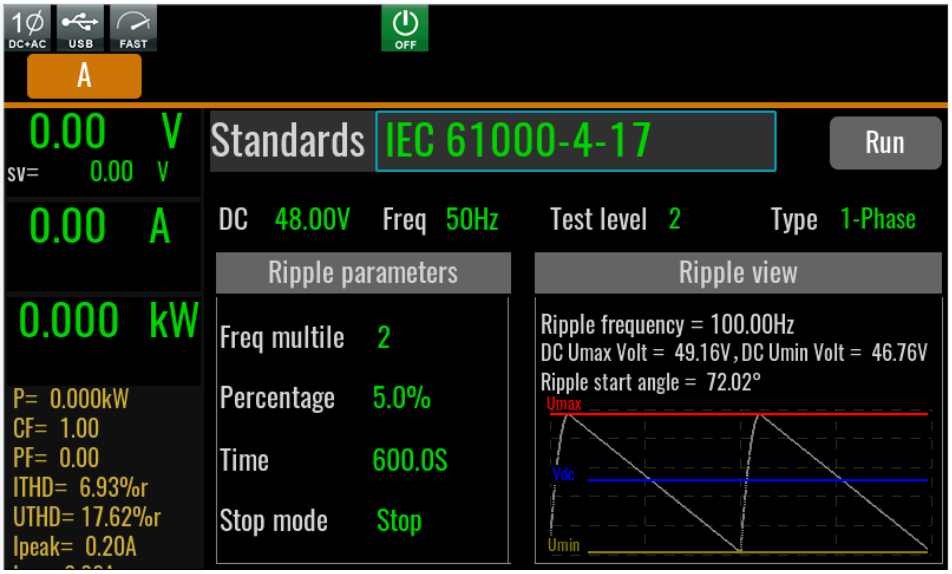

Parameter	Parameter Range	Description
DC	DC voltage value	DC voltage value
Freq	Frequency value	The gird frequency
Test Level	1,2,3,4,User define	Test lever of regulation
Type	1-phase ripple 3-phase ripple	Single phase Ripple or three phase ripple
Freq multiple	2,3,6	Ripple frequency multiplier. Ripple frequency=Freq*Freq multiple
Percentage	2%, 5%, 10%, 15%, User define%	Percentage of peak-to-peak ripple to DC value for each test level 100*（Umax-Umin）/Udc
Time	Time value	Run time of Ripple test, 0 means continuous running.
Stop mode	Stop Normal	End state
Ripple view	Ripple frequency DC Umax Umin ∠start	Displays the ripple schematic and each parameter.

3. Enable the Output.
4. Click Run and execute the regulation test.

Chapter6 System-Related Functions

6.1 System Menu Reference

Press **[Shift]** + (System) to enter the menu function. At this time, LCD displays optional menus. Select and edit the menu items by pressing the Up, Down, Left and Right keys. Specific menu items are shown below.

Voltage Source Menu:

System			
Source	Device operation mode	Select the operation mode to Voltage Source.	
		Volt Source: Voltage source mode Current Source: current source mode	
	Phase mode	Set the power supply mode	
		1-Phase	Single mode
		3-Phase	Three phase mode
		Multi-Channel	Multi-channels mode
		Reverse	Reverse phase mode
	Output couple mode	Set the output mode	
		AC	AC mode
		DC	DC mode
		ACDC	AC+DC mode
		DCAC	DC+AC mode
	Output impedance	Set the output impedance	
		Status	Enable or disable this function
		R	Set the output resistance
		L	Set the output inductance
	Off mode	Set the output turn off mode	
		Open-Z	Open circuit mode
		High-Z	High impedance mode
		Short	Short circuit mode
	Loop speed	Output loop speed control	
		High	High speed
		Low	Low speed
	External programme	External analog function:	
		Status	Set the ON/OFF state
		Mode	AM: Adjust the amplitude Amplifier: Real-time output and power Amplifier.
		Monitor phase	Select the phase to monitor. This cannot be set in single phase mode.
		U ratio	The external program ratio of voltage.
		I ratio	The external program ration of current.

	Remote sense	Set the sense function state.	
		Mode	On: Enable the remote sense Measurement Off: disable the sense function
	On/Off phase	On-mode	● Output on phase control ● Phase: setting the phase ● Imm: immediately ● Slope: Controlled according to the set slope
		Off-mode	● Output off phase control ● Phase: setting the phase ● Imm: immediately ● Slope: Controlled according to the set slope
	Measurement	Set the measurement speed	
		Lower（1000ms）	Lower mode, measuring every 1000ms
		Slow（500ms）	Slow mode, measuring every 500ms
		Medium（300ms）	Medium mode, measuring every 300ms
		Fast（150ms）	Fast mode, measuring every 150ms
		Filter	Whether to turn on the filter during measurement.
	Power Unit Setting	Unit of power, can be set to KW/kVA/KVar or W/VA/Var.	

Current Source Menu:

System			
Current Source	Device operation mode	Select the operation mode to Current Source.	
		Current Source	
	Phase mode	Set the power supply mode	
		1-Phase	Single mode
		3-Phase	Three phase mode
		Multi-Channel	Multi-channels mode
		Reverse	Spilt phase mode
	Output couple mode	Set the output mode	
		AC	AC mode
		DC	DC mode
		ACDC	AC+DC mode
		DCAC	DC+AC mode
	Output impedance	Set the output impedance	
		Status	Enable or disable this function
		R	Set the output resistance
		L	Set the output inductance
	Off mode	Set the output turn off mode	
		Open-Z	Open circuit mode
		High-Z	High impedance mode
		Short	Short circuit mode
	Loop speed	Output loop speed control	

		High	High speed
		Low	Low speed
	External programme	External analog function:	
		Status	Set the ON/OFF state
		Mode	AM: Adjust the amplitude Amplifier: Real-time output and power Amplifier.
		Monitor phase	Select the phase to monitor. This cannot be set in single phase mode.
		U ratio	The external program ratio of voltage.
		I ratio	The external program ration of current.
	Remote sense	Set the sense function state.	
		Mode	On: Enable the remote sense Measurement Off: disable the sense function
	On/Off phase	On-mode	● Output on phase control ● Phase: setting the phase ● Imm: immediately ● Slope: Controlled according to the set slope
		Off-mode	● Output off phase control ● Phase: setting the phase ● Imm: immediately ● Slope: Controlled according to the set slope
	Measurement	Set the measurement speed	
		Lowest (1Hz)	Lowest mode, measuring every 2s
		Lower (1000ms)	Lower mode, measuring every 1000ms
		Slow (500ms)	Slow mode, measuring every 500ms
		Medium (300ms)	Medium mode, measuring every 300ms
		Fast (150ms)	Fast mode, measuring every 150ms
		Filter	Whether to turn on the filter during measurement.
	Power Unit Setting	Unit of power, can be set to KW/kVA/KVar or W/VA/Var.	

General Menu:

General	Buzzer	Set the keyboard sound	
		Key	Buzzer on/off for key
		Protect	Buzzer on/off for protect
	Brightness	Set the screen brightness.	
		1-10	Set the screen brightness level
	Factory-default-settings	Select whether to reset the factory default settings or not.	
		Enter	Confirm to reset operation

	Power-on setup	Set the power-on state.	
		Reset	When the instrument is powered on, the instrument will initialize some settings and [On/Off] state.
		Last	When the instrument is powered on, the instrument will remain the same settings and [On/Off] state as last time you turned off the instrument.
		Last-OFF	When the instrument is powered on, the instrument will remain the same settings as last time you turned off the instrument, but the [On/Off] is OFF state.
	Parallel mode	Set the instruments to parallel operation mode.	
		Role	● Master: Set the instrument to master mode. ● Single: Set the instrument to single mode, i.e., disable the parallel operation mode. ● Slave: Set the instrument to slave mode.
		Numbers	Number of parallel instruments.
	Touch function	Lock the touch screen function	
		Status	Set the ON/OFF state
	Knob immediately effective	Knob setting will take effect immediately. If set to ON, the Knob setting will take effect immediately. If set to OFF, press ENTER to confirm the effect after the Knob setting is completed.	
	Language	Set the language of display	
		English	English
		Chinese	Chinese
	Soft keyboard	Set the soft keyboard	
		On	Turn on the soft keyboard.
		Off	Turn off the soft keyboard.
	Update Role	Boot-time networking for use primarily in program updates.	
		Single	Single mode
		Master	Master mode
		Outer	Switch the slave unit without panel to the outer ring master role.
		Slave	Switch the master unit with the panel to the inner ring slave role.
		Null	Disable this function
	Navigator	Open the floating navigation key	
		On	Open the floating navigation key.
		Off	Close the floating navigation key.
	Watchdog	Open the watchdog.	

		Status	On/Off: enable the watchdog function
		Delay	Delay time
Communication	USB type	Set the USB type.	
		DEVICE: the USB device is used to communication with PC.	
		HOST: the USB device is used to storage disk.	
	USB device class	USB communication interface	
		VCP	Virtual serial port
		TMC usbtmc	USB-TMC protocol
	LAN config	LAN communication interface	
		Mode	● DHCP: automatically configure the address of the instrument. ● Manual: manually configure the address of the instrument by entering values in the following five fields.
		IP	Set the IP address.
		Mask	Set the subnet mask.
		Gateway	Set the gateway address.
		Port	Set the port number.
	CAN config	CAN communication interface.	
		Baud rate	Select the baud rate
		Addr	Set the instrument address to a number
	RS232 config	Select RS-232 communication interface. When insert IT-E177 communication board into expansion slot, the menu displays this information.	
		Baud rate	Baud rate
		Databits	Data bit: 5/6/7/8
		Stopbits	Stop bit: 1/2
		Even-odd check	Parity bit: N (No parity) / E (Even parity) / O (Odd parity)
		Addr	Address
	GPIB config	Select GPIB communication interface. When insert IT-E176 communication board into expansion slot, the menu displays this information.	
		Addr	Set the communication address
IO	Digital IO-1:Remote Inhibit Input	Function setting of pin 1	
		Reverse	On/Off, Select Invert or not under the IO Settings. If setting to ON, it means the valid signal is reversed.
		Function	● Inhibit-living: ● Inhibit-latch ● Input ● Output
	Digital IO-2: PS Clear	Function setting of pin 2	
		Reverse	On/Off, Select Invert or not under the IO Settings. If setting to ON, it means the valid signal is reversed.
		Function	● PS Clear

			● Input ● Output
	Digital IO-3: PS	Function setting of pin 3	
		Reverse	On/Off, Select Invert or not under the IO Settings. If setting to ON, it means the valid signal is reversed.
		Function	● PS ● Input ● Output
	Digital IO-4: SYNC	Function setting of pin 4, this pin function is unavailable.	
		Reverse	On/Off, Select Invert or not under the IO Settings. If setting to ON, it means the valid signal is reversed.
		Function	● Sync-in ● Sync-out ● Input ● Output
	Digital IO-5: ON/OFF Status	Function setting of pin 5	
		Reverse	On/Off, Select Invert or not under the IO Settings. If setting to ON, it means the valid signal is reversed.
		Function	● ON/OFF Status ● Input ● Output
	Digital IO-6: TRIG1	Function setting of pin 6	
		Reverse	On/Off, Select Invert or not under the IO Settings. If setting to ON, it means the valid signal is reversed.
		Function	● Trigger1-out ● Trigger1-in ● Input ● Output
		AC	On/Off: When On is selected, a trigger signal is output when AC amplitude changes. The accuracy of voltage change is 100mV and is not restricted by phase. (This configuration is displayed only when the IO pin is set to Trigger1-out)
		DC	On/Off: When On is selected, a trigger signal is output when the DC amplitude changes, and the voltage change precision is 100mV. (This configuration is displayed only when the IO pin is set to Trigger1-out)
		Freq	On/Off: When On is selected, a trigger signal is output when the frequency changes.The accuracy of frequency change is 0.1Hz (This configuration is displayed only when the IO pin is set to Trigger1-out)
		List	On/Off: When On is selected, the List generates a trigger signal and outputs a trigger signal.

			(This configuration is displayed only when the IO pin is set to Trigger1-out)
	Digital IO-7: TRIG2	Function setting of pin 7	
		Reverse	On/Off
		Fun	● Trigger1-out ● Trigger1-in ● Input ● Output
		AC	On/Off: When On is selected, a trigger signal is output when AC amplitude changes. The accuracy of voltage change is 100mV and is not restricted by phase. (This configuration is displayed only when the IO pin is set to Trigger2-out)
		DC	On/Off: When On is selected, a trigger signal is output when the DC amplitude changes, and the voltage change precision is 100mV. (This configuration is displayed only when the IO pin is set to Trigger2-out)
		Freq	On/Off: When On is selected, a trigger signal is output when the frequency changes.The accuracy of frequency change is 0.1Hz (This configuration is displayed only when the IO pin is set to Trigger2-out)
		List	On/Off: When On is selected, the List generates a trigger signal and outputs a trigger signal. (This configuration is displayed only when the IO pin is set to Trigger2-out)
Information	Product model	Display the instrument model.	
	Serial number	Display the serial number.	
	Software version	Display the control board version.	
	MAC address	MAC address	
	Rbf Version	Rbf version	
	Ctrl1 version	Ctrl1 version	
	Ctrl2 version	Ctrl2 version	
	Hardware version	Hardware version	
	Inner numbers	The inner numbers setting item is required when using F-TX and F-RX fiber to achieve master-slave model parallel.	

6.1.1 Menu function

Set OFF Mode Status

This parameter is used to set the status after the power output is off.

- Select to High-Z, After the power output is Off, the dc impedance between the terminals of the power supply is high, and the resistance value varies with different models.
- Select to Short, When the power output is Off, the terminals of the power supply are short-circuited, the voltage is 0.

- Select to Open-Z, After the power output is Off, the power supply is in open mode, and the internal circuit and external load of the power supply are disconnected by relay.

Set the keyboard sound

This item can set the key sound state. If in ON mode, then when you press a button, the power supply will beep. If in OFF mode, the beeper will not make a sound. The default set is in ON mode.

Set the screen brightness

This item can set the screen brightness. Set the screen brightness within the range 1 to 10 by pressing number keys on the front panel. The larger the number is, the higher the screen brightness is. You can also set the screen brightness by rotating the knob on the front panel.

Restored to Factory Setting

This menu item is used to restore some parameter settings to factory setting values.

The procedures to set the menu item are as follows.

1. Select the **General** under system menu.
2. Press **Enter** in **Factory_default_settings.** After the parameter settings are complete and return to main interface.

Set the Power-on State

This parameter determines the state of the AC source after power up.

The procedures to set the menu item are as follows.

1. Press the **General** under the system menu.

2. Press the Up/Down key or turn the knob to select the **Power-on setup** and press **[Enter]**.

- Reset: Default value, indicates when the instrument is powered on, the instrument will initialize some parameter settings or state, such as output voltage, output frequency, start phase and stop phase.
- Last: Indicates when powered on, the instrument will remain the same parameter settings and output status as last time you powered off the instrument.
- Last+Off: Indicates when powered on, the instrument will remain the same settings as last time you powered off the instrument, but the output status is **Off**.

Lock the Touch Screen

This parameter determines the state of the touch screen.

1. Press the **General** under the system menu.

2. Press the Up/Down key or turn the knob to select the **Touch screen lock** and press **[Enter]**.

- On: enable the touch screen
- Off: disable the touch screen

Set the Loop Speed

This item can control stability of the loop. When the connected load is capacitive load or inductive load, select Slow; when the connected load is resistance, select High.

Set the Knob Function

Set the knob setting function. If set to ON, the Knob setting will take effect immediately. If set to OFF, press Enter to confirm the effect after the Knob setting is completed.

Select Language

Users can select the instrument language type from the menu.

Set the Soft Keyboard

The user can open the soft keyboard in the menu. When the parameter is set to ON, the soft keyboard is enabled. And when setting parameters on the screen, the soft keyboard appears. Convenient users directly touch screen to select the number.

6.1.2 Set the communication interface

This menu item is used to set the communication information between instrument and PC. The standard communication interfaces for IT7900 series power supply are USB, LAN and CAN. You can also select the non-standard interface GPIB or RS-232 based on personal requirement.

The user does not need to select the communication interface. The instrument will automatically select the present communication mode according to the communication interface accessed by the rear panel.The user only needs to set the communication parameters and keep them consistent with the PC Settings.

NOTE

- When select USB interface, the USB type need to be DEVICE.
- The instrument supports the non-standard RS-232 and GPIB interfaces, and the configuration items in the menu are dynamically displayed according to the interface user selected

6.1.3 View the System Information

System Information menu is used to view the system information of the instrument. Include product model, SN, software version and MAC address.

6.2 Configuration Menu Reference

Press [**Config**] key and enter to configuration menu interface. At this interface, user can setup the power supply output parameters, detailed parameters are shown as follows:

DC Config	Configuration setting for DC mode	
	Voltage DC	Vdc: Output voltage of DC, range from 0-full scale Slew Rate: Slope , range from 0-5000V/ms
DC+AC Config	Configuration setting for DC+AC mode	

	Voltage DC	Output voltage of DC, range from 0-full scale Slew Rate: Slope , range from 0-5000V/ms
	Ripple control	Wave: Select the output wave type Vac: output voltage of AC, range from 0-10% of full scale Freq: frequency value
AC Config	Configuration setting for AC mode	
	Balance control	Only displayed in 3-phase mode. Balance control in 3-phase mode. If select On, the output of ABC phase is synchronous. If select Off, the output is not balanced.
	Voltage AC	Output voltage Vac: output voltage of AC, range from 0-full scale Slew Rate: Slope , range from 0.0001-5000V/ms
	Frequency	Freq: output frequency, range from 16-150Hz Slew Rate: slope, range from 0.00001-5000Hz/ms
	Phase control	Phase difference between AB and AC, only valid in balance control is Off state. AB: Phase difference between A and B. AC: Phase difference between A and C.
	Waveform	Selece and edit the output wave type. For detailed introduction please refer to 5.6 waveform selection.
	Dimming	Status: Dimming function switch. Edge: select front edge or back adge Phase: phase control, range from 0-180°
AC+DC Config	Configuration setting for AC+DC mode	
	Balance control	Only displayed in 3-phase mode. Balance control in 3-phase mode. If select On, the output of ABC phase is synchronous. If select Off, the output is not balanced.
	Voltage AC	Output voltage Vac: output voltage of AC, range from 0-full scale Slew Rate: Slope , range from 0.0001-5000V/ms
	Voltage DC	Output voltage of DC, range from 0-10% of full scale Slew Rate: Slope , range from 0-5000V/ms
	Frequency	Freq: output frequency, range from 16-150Hz Slew Rate: slope, range from 0.00001-5000Hz/ms
	Waveform	Selece and edit the output wave type. For detailed introduction please refer to 5.6 waveform selection.

	Dimming	Status: Dimming function switch. Edge: select front edge or back adge Phase: phase control, range from 0-180°

Current Source Mode:

AC Config	Configuration setting for output.	
	Current AC	Output current. Iac: output current of AC, range from 0-full scale Slew Rate: Slope , range from 0.0001-5000A/ms
	Frequency	Freq: frequency of output, rang from 16-2400Hz Slew Rate: slew rate of frequency, 0.00001-5000Hz/ms
	Waveform	Selece and edit the output wave type. For detailed introduction please refer to 4.3 waveform selection.
	Dimming	Status: Dimming function switch. Edge: select front edge or back adge Phase: phase control, range from 0-180°
AC+DC Config	Configuration setting for output.	
	Current AC	Output current. Iac: output current of AC, range from 0-full scale Slew Rate: Slope , range from 0.0001-5000A/ms
	Current DC	Idc: DC current value, range from 0-full scale Slew Rate: slew rate, 0-5000A/ms It is not displayed in three-phase balanced mode, if you need to set the three-phase DC component, balanced mode needs to be turned off.
	Frequency	Freq: frequency of output, rang from 16-2400Hz Slew Rate: slew rate of frequency, 0.00001-5000Hz/ms
	Waveform	Selece and edit the output wave type. For detailed introduction please refer to 4.3 waveform selection.
	Dimming	Status: Dimming function switch. Edge: select front edge or back adge Phase: phase control, range from 0-180°

Balance Control Setting

In three-phase mode, the instrument is in three-phase balance mode by default, and the three-phase output voltage will be set synchronously, and the phase Angle between phases is fixed at 120°, which cannot be set.

You can set the Balance Control to Off and disable the Balance control function

in the Config menu. And then, the voltage of each phase can be set independently, and the config menu displays the phase Angle difference setting parameter between AB and AC.

Dimming Function

The front and back edge of the waveform can by concealed and the phase angle set with Dimmer function to regulate the active power, thus adjusting the lighting intensity.

Select Front edge, and phase set to 90° in Configuration menu.

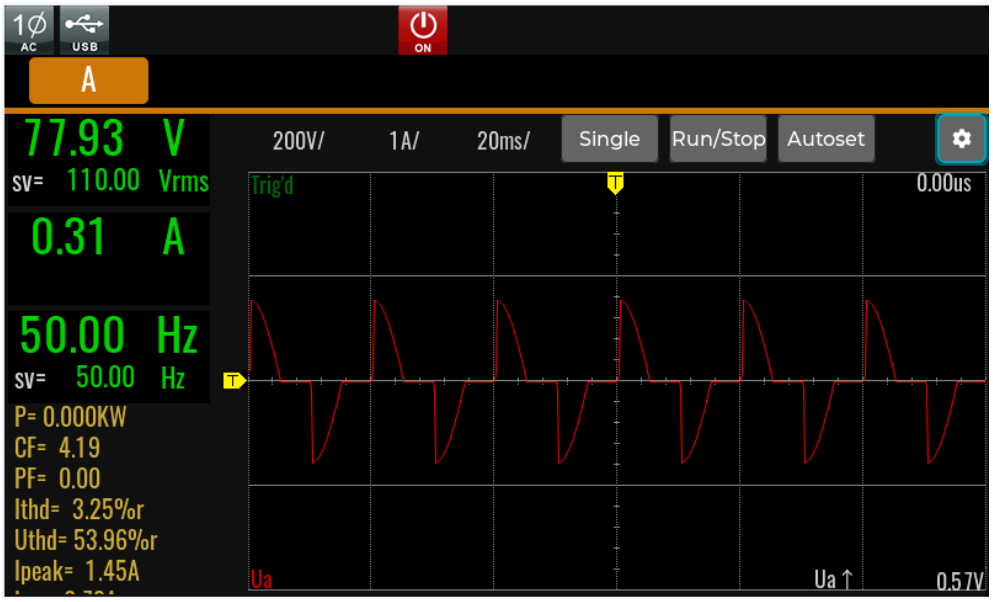

Select Back edge, and phase set to 90° in Configuration menu.

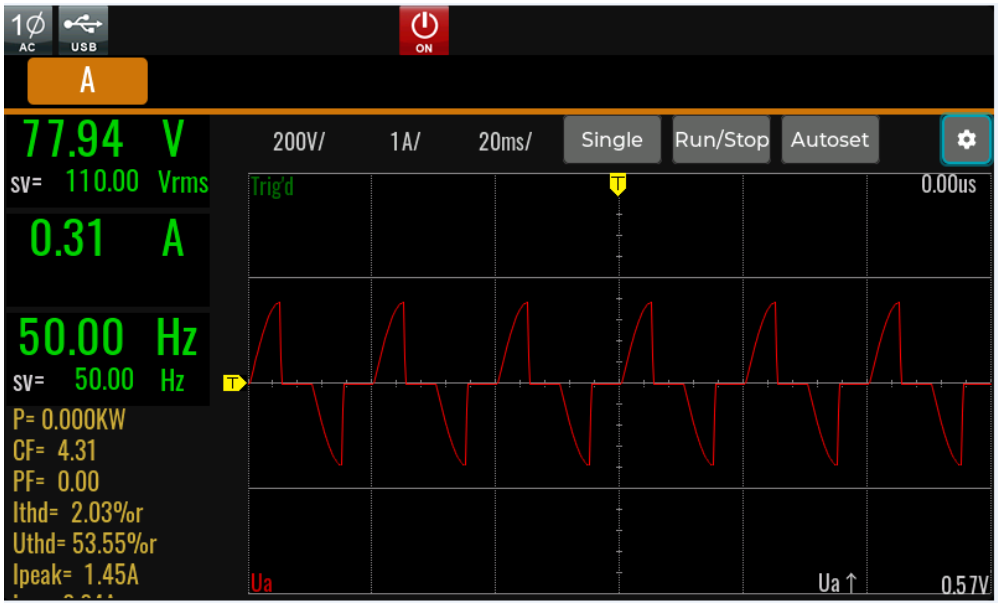

6.3 Key Lock Function

Press **[Shift] + [2]** (Lock) button to set the key lock state. If keyboard has been locked, the indicator light “Lock” will display on the LCD. In addition, when

keyboard are locked, all buttons can't be used except Local key Press **[Shift] + [2]** (Lock) once again will relieve key lock function.

6.4 Switching Local/Remote Mode

You can press the **[Shift] +[3]** (Local) button to change the AC source from remote to local operation.

After you power on the AC source, it defaults in local mode, all buttons are enabled. While in remote mode, most buttons are disabled except **[Shift] +[3]** (Local) keys. You can switch Local/Remote mode via PC. In addition, the mode modification will not affect the output parameters.

6.5 Save and Recall Operations

The power system can save up to 10 common parameters in nonvolatile memory (No. 1 to No. 10) for user to recall conveniently.

The saved parameters include:

- Power supply mode
- Present output mode
- Config menu settings

You can do the save and recall operations by the following two methods.

- Press the composite keys **[Shift]+[4]** (Save) to save the parameters. Pressthe composite keys **[Shift]+[5]** (Recall) to recall the parameters.
- SCPI commands: *SAV and *RCL

Save Operation

The save operation procedures are as follows:

1. Press the composite keys **[Shift]+[4]** (Save) to enter the parameter save interface.
2. Select the storage location. up to 10 position can be select.

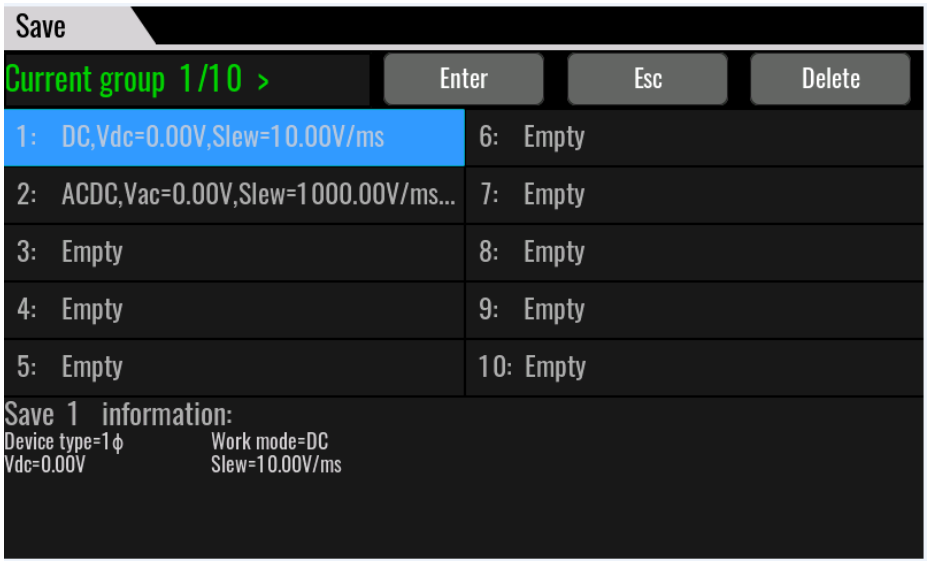

3. Press **[Enter]** to save the parameters.

   Finished, the saved parameters will be display at the bottom of the interface.

Recall Operation

You can recall the parameters you saved in the specified memory location as the setting values.

1. Press the composite keys **[Shift]+[5]** (Recall) to enter the parameter recallinterface.
2. Set the storage location.

   Press the direction keys to set the storage location, and then, the saved parameters will be display at the bottom of the interface.
3. Press **[Enter]** to recall the parameters.

6.6 Protection Function

IT7900E series source includes the following protection functions: overcurrent protection (Current RMS protection, Current peak protection), voltage limit protection and over-temperature protection (OTP).

AC/ACDC Mode

Press **[Shift]**+**[Config]** (Protect) and enter to **Protect** configure menu, where you can set the following protection.

Current RMS protection	RMS current for OCP protection	
	Rms	Protection point
	Time	delay time of protection
	Type	Protection type.
		Limit
		Output Disable
Current peak protection	Current Peak OCP	
	Peak	Protection point
	Time	delay time of protection
Voltage peak range	Voltage peak range setting	
	V limit	Maximum voltage setting
Power limit range	Power limit setting	
	P limit	Power limit point
	Time	delay time of protection
	Type	Protection type. Limit Output Disable

Current Source mode:

Current Limit range	Current limit range	
	Mode	Can not be set.
	Time	Delay time, range from 0s-10s.
	I-High	Current high value
	I-Low	Current low value
Voltage Limit range	Voltage limit range	
	Mode	Can not be set
	Time	Delay time, range from 0s-10s.
	V-High	Voltage high value
	V-Low	Voltage low value
Power Limit range	Power limit range	
	Mode	Can not be set
	Time	Delay time, range from 0s-10s.

	P-High	Power high value
	P-Low	Power low value

DC/DCAC Mode

Press **[Shift]**+**[Config]** (Protect) and enter to **Protect** configure menu, where you can set the following protection.

Current limit range	Current limit setting	
	I+ limit	Maximum current setting, the current setting will be limited to this range.
	I- limit	Minimum current setting, the current setting will be limited to this range.
Voltage limit range	Voltage limit setting	
	V+ limit	Maximum voltage setting, the voltage setting will be limited to this range.
	V- limit	Minimum voltage setting, the voltage setting will be limited to this range.
Power limit range	Power limit setting	
	P+ limit	Maximum power setting, the power setting will be limited to this range.
	P- limit	Minimum power setting, the power setting will be limited to this range.

6.6.1 Current RMS Protection

The user can set the over-current protection point, delay time and protection type for the Current RMS protection function. The function is mainly used to protect the DUT connected during test to prevent it from damage due to over-current. The OCP (rms) function is always enabled.

RMS OCP Type:

- Limit: If the output current reaches the RMS current protection point, the protection will be activated. The power supply output current is controlled within the current limiting value. The power supply will output in current limit mode.
- Output Disable: When the output current reaches the over-current protection point and the period is greater than the set protection delay time, the over-current protection (rms) will turn off the output.

How to Set

1. Press [Shift]+[Config] (Protect) keys and enter to Protection menu.
2. Press the up/down key or rotate the knob to select Current RMS protection and press [Enter].
3. Set the protection RMS Level, the delay time and protection type in sequence, and press [Enter] to confirm.

Clear RMS OCP Protection

When RMS OCP protection occurs, the instrument responds as follows:

- Instrument output is off;
- The buzzer sounds;
- The interface displays “OCPrms” and flashes

To clear the RMS OCP and return to normal operation, firstly remove the conditions that caused the protection fault. Press **[Shift] +[Esc]** key (or send the command PROTection:CLEar) to clear the protection status. The message displayed in front panel is cleared and the instrument exits protection status.

6.6.2 Set the Current Peak protection

The user can set the current peak protection point and delay time for the Current peak protection function. The function is mainly used to protect the DUT connected during test to prevent it from damage due to over load. The OCP peak function is always enabled.

How to Set

1. Press [Shift]+[Config] (Protect) keys and enter to Protection menu.
2. Press the up/down key or rotate the knob to select Current peak protection and press [Enter].
3. Set the protection peak Level and the delay time in sequence, and press [Enter] to confirm.

Clear Peak OCP Protection

When peak OCP protection occurs, the instrument responds as follows:

- Instrument output is off;
- The buzzer sounds;
- The interface displays “OCPpeak” and flashes

  To clear the peak OCP and return to normal operation, firstly remove the conditions that caused the protection fault. Press **[Shift]**+**[Esc]** key (or send the command PROTection:CLEar) to clear the protection status. The message displayed in front panel is cleared and the instrument exits protection status.

6.6.3 Set Voltage/Current/Power Limit Range

The maximum voltage, current and power of the power supply ranges from minimum to full-rated output range. You can setting maximum and minimum values of power supply voltage/current/power in the protection menu. When limit setting is finished, the voltage setting value, current setting value and power setting value can only be set within the maximum and minimum limits.

Limit factory setting is the rated output voltage/current/power of corresponding model of the power supply. Minimum is 0.

Take the voltage limit setting for an example, the operating as follows:

1. Press [**Shift**]+[**Config**] (Protect) keys and enter to Protection menu.
2. Press the up/down key or rotate the knob to select Voltage limit range and press [**Enter**].
3. Set the V+ limit and the V- limit in sequence, and press [**Enter**] to confirm.

6.6.4 Over-temperature protection (OTP)

When the temperature of the power component in the power supply exceeds 95°C, the temperature protection will be enabled. In this case, the power supply

will be automatically OFF, and the LCD will display . At the same time, the OT position in the status register will be set and kept until power supply is reset.

Clearing over-temperature protection:

When the power supply temperature decreases to the protection temperature, press **[Shift]+[Esc]** key on the front panel (or send the command "PROTection:CLEar"). Then on the power supply screen will disappear, and the power supply will exit the OTP status.

6.6.5 Over-power protection (OPP)

When the output power exceeds the set power, OPP will be enabled, and will appear on the LCD screen.

Clearing over-power protection:

In the case of over-power protection, disconnect the tested object at first. Press **[Shift]+[Esc]** on the front panel (or send the command "PROTection:CLEar") to clear on the front panel and exit the OPP mode.

6.7 Screen Capture Function

IT7900E series power supply has the screen capture function. Insert the USB equipment into the USB interface of the front panel, and press **[Print]** on the front panel to capture and save the current screen into the USB disk.

When you need the screen capture function, the USB type under the system menu needs to be set to **Host**.

6.8 Trigger Function

IT7900E series has four trigger source to choose: trigger by keys (Key), Bus trigger (Bus) and External signal trigger (TRIG1/TRIG2).

- Manual: if **[Trig]** on the front panel is pressed in the valid manual trigger mode, the power supply will be triggered once.
- Bus: if the bus trigger command is received by the power supply in the valid bus trigger mode, the power supply will be triggered once.
- Trigger1: if one trigger signal is connected to the Digital IO-6 of digital I/O Interface terminal on the rear panel, the power supply will be triggered once.
- Trigger2: if one trigger signal is connected to the Digital IO-7 of digital I/O Interface terminal on the rear panel, the power supply will be triggered once.

6.9 Query the System Log

The IT7900E series power supply provides the system operation Log query function. On the Menu interface of the front panel of the instrument, click Log or directly press Shift +1[Log] to enter the Log query interface. You can view historical system operation records on this screen.

6.10 Query the Energy

IT7900E series power supply provides the energy statistics function. Click WHours button in the Menu interface of the front panel of the instrument to enter the quantity query interface. You can view power statistics on this screen.

6.11 Set Parallel Operation Mode

The IT7900E series power supply supports multiple instruments to work in parallel mode to provide more power and current output capability. Under the parallel mode, All features are set up from the master unit.

This chapter takes three instruments (with operation panel) as an example to describe how to parallelize the single units and how to return from parallel mode to single mode.

Connect the instruments (3U model)

CAUTION

- Before connecting the system bus, you must ensure that each instrument is in single mode (Single).
- Fiber optic cables cannot be flexed or folded. When the cable is too long and needs to be arranged, gently wrap the cable in a circle and gently tie it.

WARNING

- Before connecting the cables, ensure that the instrument power switch is off and the main switch of the AC power input (distribution box) is off.
- Before connecting 3 single instruments to the AC distribution box, ensure that the distribution box capacity is sufficient. Refer to the corresponding specifications for the AC input parameters of a single instrument.

For 3U models, the same model can be connected in parallel. Taking three 3U single instruments (with operation panel) as an example, the steps for parallel operation are as follows.

1. Ensure that the power switches of the three units and the main switch of the AC power distribution box are off.
2. Refer wiring connection diagram to connect three units.

   For long distance testing requirements:

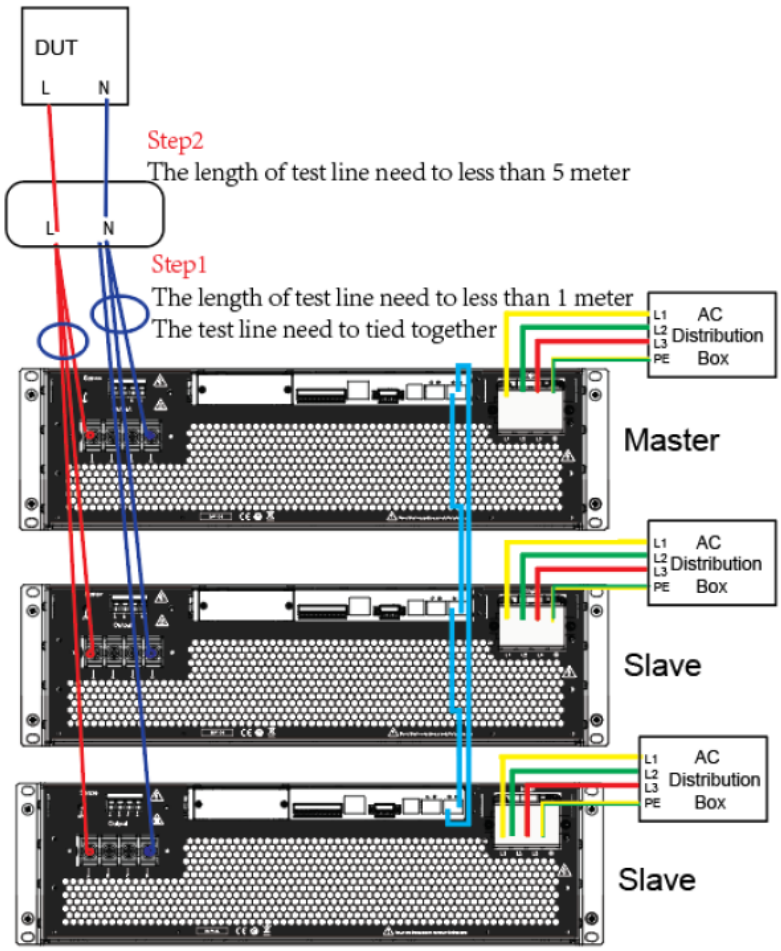

For short distance test requirements:

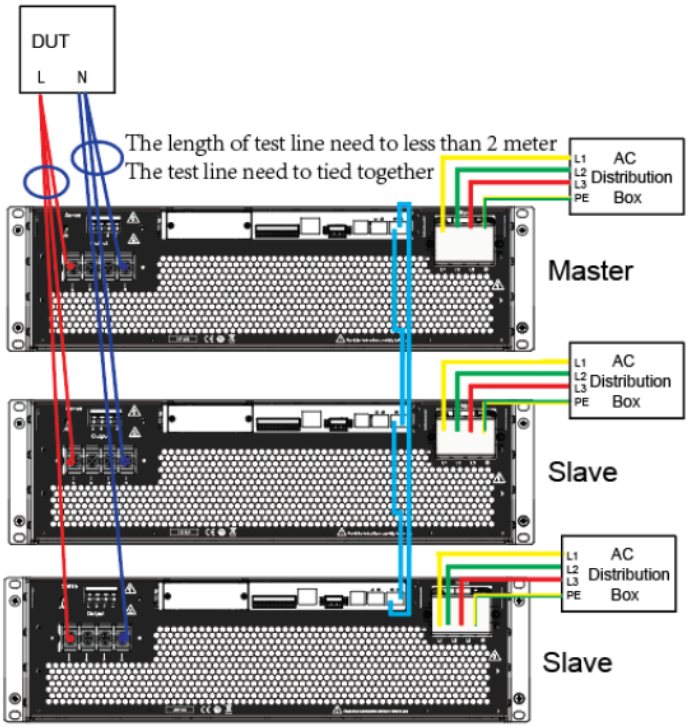

3. Connect the AC input terminals of the three units separately, and connect

them to the AC distribution box.

4. Connect the output terminals of the three units in parallel and connect them to the DUT.
5. Refer to the blue wiring legend in the figure, connect the System Bus (i.e., the fiber outer ring interfaces TX and RX) for fiber-optic communication between the master and slaves.

a) Insert the fiber optic module into the hole corresponding to TX RX.

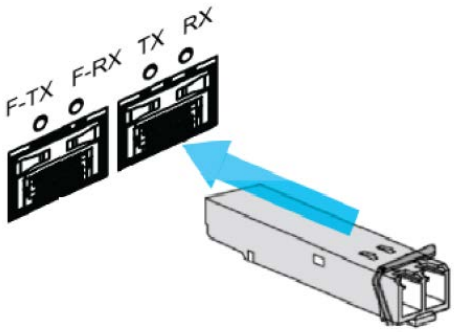

b) Insert the plug of the fiber optic cable into the fiber optic module and hear a click sound to indicate that it is inserted in place. The fiber optic cable connection schematic is as follows.

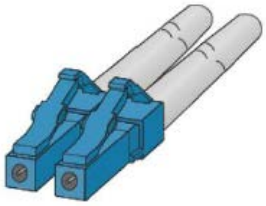

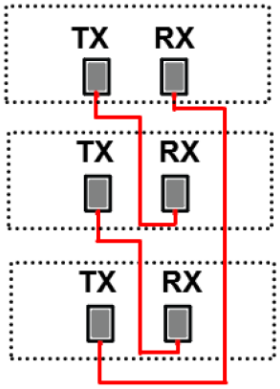

Set the Parallel Mode

1. Turn on the main switch of the AC distribution box and power on each of the three units.
2. Set three units in parallel mode with one master and two slaves.
3. Press the composite keys [Shift]+ (System) on the front panel to enter the system menu.
4. Select General menu.

5. Set the **Parallel Mode,** set them to one master unit and two slave units. In each group, one instrument must be the master unit and all other instruments connected in parallel are slave units. All features are set up from the master unit.

- Single: Default value, indicates that the instrument is in single mode.
- Master: Indicates that the single unit is set to master in parallel mode.

  Numbers: total number of units in the parallel relationship, when the instrument set to master, you need to set the Numbers. For example, Numbers set to 3.
- Slave: Indicates that the instrument is set to the slave in parallel mode.

6. After the parallel menu of the three units are set, restart the instrument separately.

   After the instrument is restarted, the screen shows that the instrument is working in parallel mode.

Revert to Single Mode

1. Set each of the three instruments to single mode.

a) Press the composite keys [Shift]+ (System) on the front panel to enter the system menu.

b) Select General menu.

c) Set the **Parallel Mode,** set them to single.

2. Power off the three instruments and turn off the main switch of the AC distribution box.
3. Remove the cables connection of the System Bus and output terminals between three units.
4. Power on the three instruments separately.

   After the instrument is restarted, the screen shows that the instrument is working in single mode.

Connect the instruments (Cabinet model)

CAUTION

- Before connecting the system bus, you must ensure that each instrument is in single mode (Single).
- Fiber optic cables cannot be flexed or folded. When the cable is too long and needs to be arranged, gently wrap the cable in a circle and gently tie it.

WARNING

- Before connecting the cables, ensure that the instrument power switch is off and the main switch of the AC power input (distribution box) is off.
- Before connecting 3 single instruments to the AC distribution box, ensure that the distribution box capacity is sufficient. Refer to the corresponding specifications for the AC input parameters of a single instrument.

For cabinet models, the same model can be connected in parallel. Taking two 15U instruments (with operation panel) as an example, the steps for parallel operation are as follows.

1. Ensure that the power switches of the instrument and the main switch of the AC power distribution box are off.

Refer wiring connection diagram to connect two units.

The configuration method is the same as 3U model instrument.

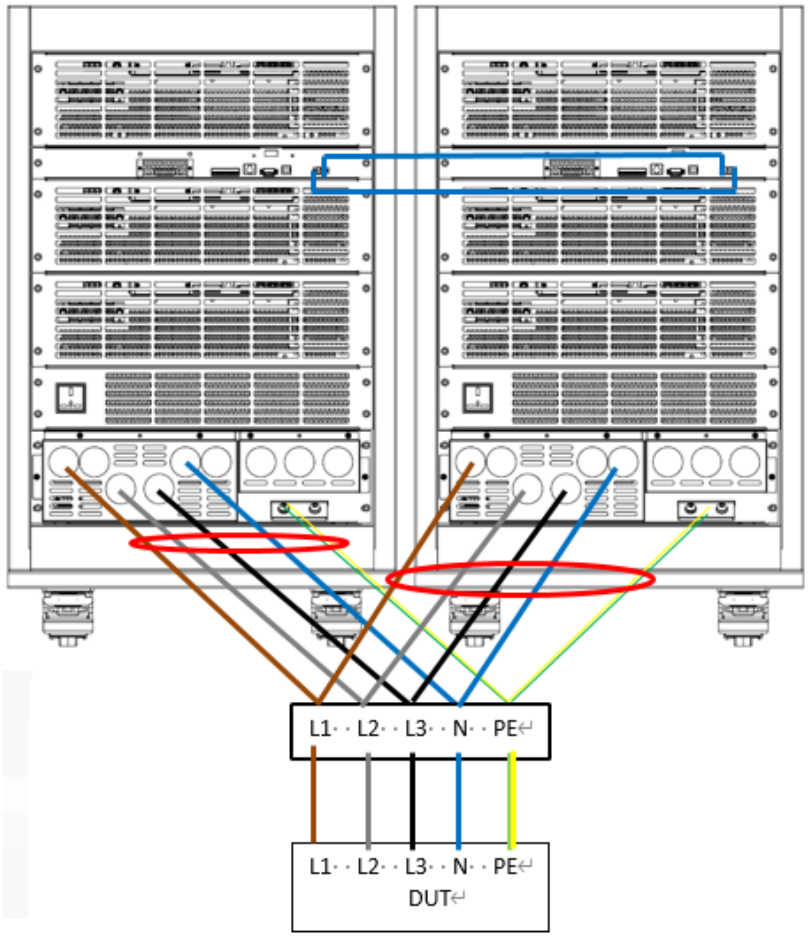

Notice:

- The connection cables from the cabinet terminals to the mid-node are as short as possible and bundled up after the connection is completed. The cable length from the two cabinets must be the same.
- Connect TX, RX fiber cable of two cabinets for communication, connected in the same way as a 3U model instrument.

6.12 Remote Measurement Function

The IT7900E series power supply supports two connection methods: Local measurement and Remote sensing. The remote sensing is used for maximizing measurement accuracy. (Refer to 2.4 Connecting Test Lines).

The procedures to set the menu item are as follows.

1. Press the composite keys [Shift] + (System) on the front panel to enter the system menu.
2. Press the up/down key or rotate the knob to select **Sense compensation** and press [**Enter**].

- Local: Default value, indicates turn the sense function off.
- Remote: Indicates turn the sense function on.

3. After the parameter settings are complete, press [**Enter**].

6.13 Digital I/O Function

This series power supply supports digital I/O function. The user can realize logic control over high and low level input or output by related configurations in the system menu.

Pins Introduction

Different I/O implements different functions. The detailed functions description are shown in the figure below:

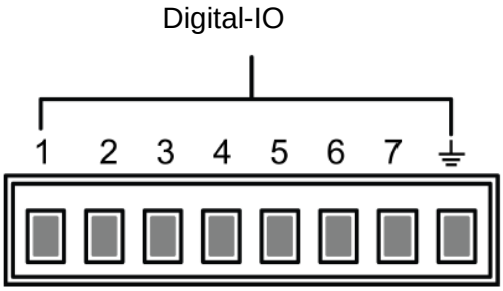

Pin	Type	Description	Properties
Digital IO-1	Input/Output	Turn off the output under emergency status	Level signal
Digital IO-2	Input/Output	Clear the protection state	Pulse signal
Digital IO-3	Input/Output	Protection state indicator	Level signal
Digital IO-4	Input/Output	This pin function is unavailable.	Pulse signal
Digital IO-5	Input/Output	OnOff-status indicator	Level signal
Digital IO-6	Input/Output	Trigger1	Pulse signal
Digital IO-7	Input/Output	Trigger2	Pulse signal
⏚	Ground terminal, that is, the negative terminal corresponding to each of the above 7 pins.		

General Digital I/O Function

- Signal definition

Digital I/O functions involve input and output levels and pulse signals.The input signal is the control signal provided externally to IT7900, the output signal is the level signal provided externally by IT7900, and the pulse signal is the edge signal switched between high and low levels.

Input signal	High level signal	Typical: 5V Range: 1.6V-15V Current: ≤100mA
	Low level signal	Typical: 0V Range: -5V-0.8V Current: ≤100mA
Output signal	High level signal	Voltage level: 5V Current: ≤1mA
	Low level signal	Voltage level: 0V Current: 0.5mA
Pulse	Level rise slope	10us
	Level fall slope	2us
	Width	30us

- Input/Output Function

  The IO-1 ~ IO-7 pins are featured default function, the user can setting the function of pin according to requirement. The Input and Output are the general digital I/O function, and the parameter settings and functions of the seven pins are the same.
  The IO-1~IO-7 pins provide default functions. Users can realize control according to the functions defined. Users can also reset the input or output properties of the present pin and customize the function use of the pin according to their needs.
  When pins 1 to 7 are configured to Output function, when send the command (IO:STATe 1/0) to instrument, the IO pin can output high level (False) or low level (True).
  When pins 1 to 7 are configured to Input function, an external signal can be Input to this pin, and the instrument can detect the state of the external signal.

- Signal Revert

  Select Invert or not under the IO Settings menu. If setting to OFF, it means the default level will be valid. If setting to ON, it means the valid signal is reversed. For example, the IO-1 pin is inhibit output by default and the high level is valid, when select revert ON, the low level is valid and the instrument output is disabled.

Digital IO-1

IO-1 pin can be set to 【Inhibit-latch】,【Inhibit-living】, 【Input】, 【Output】

The default function is inhibit output. When the IO pin is configured for a Inhibit function and the level signal is low, the output of the machine is forbidden. At

this point, Pin 1 has a bi-directional I/O function, which can both receive the level signal input from the external instrument and output the level signal outward.default level is high, and low is valid when entering. Outgoing output also generates low level signals.

Inhibit function has two mode: Latch and Living.

- Living: When input an inhibit signal and the instrument output is turned OFF. The status bar of the LCD screen displays INH warning icon and the output is marked as OFF. If power supply output is ON state before, the ON/OFF button will be lit. When the input signal undoes, the output returns to normal. This function can be used to control the output of the power supply.
- Latch: When input an inhibit signal and the instrument output is turned OFF. The ON/OFF button will be lighted off, the status bar of the LCD screen displays INH warning icon. In this case, user need to remove the input signal and press [Shift]+[Esc] to cleare protection, then manually turn on [On/Off] again.

Digital IO-2

IO-1 pin can be set to 【PS-clear】, 【Input】, 【Output】

The default function is to clear the protected state. When the protection occurs, the protection state can be cleared through this pin, so that the instrument can continue to output normally.

IO-2 is bi-directional, that is, when the power supply is in a protected state, the instrument can receive a pulse signal from an external input through IO-2 for clean protection operation, or when the power supply is in a protected state, the clean protection can generate a pulse signal from IO-2.

Digital IO-3

IO-3 pin can be set to 【PS】, 【Input】, 【Output】

The default function is protection state indicator. IO-3 pin will output high or low level based on whether the instrument is under protection or not. Under normal conditions (Not under protection), and when pin3 is under default setting (Not Invert), pin 3 outputs high level; when the instrument is under protection, pin 3 outputs low level. When pin3 is set to Invert, the output level is completely opposite.

Digital IO-4

IO-4 pin can be set to【Sync-in】, 【Sync-out】,【Input】,【Output】

This pin function is unavailable.

Digital IO-5

IO-5 can be set to 【OnOff-status】, 【Input】, 【Output】

The default function is to indicate the output state of the power supply, in case of output is ON, output 5V, otherwise, output 0V.

When pin5 is set to Invert, the output level is completely opposite.

Digital IO-6

IO-6 can be set to【Trigger1-in】, 【Trigger1-out】, 【Input】,【Output】

【Trigger1-in】: The input trigger signal, the pulse signal sent to the IO-6 pin can

be used as the trigger source. Users can select as the trigger source of the corresponding function in the menu.

【Trigger1-out】: The output trigger signal, when the instrument generates a trigger signal, the pin6 generates an pulse signal.

Digital IO-7

IO-7 can be set to【Trigger2-in】, 【Trigger2-out】, 【Input】,【Output】

【Trigger2-in】: The input trigger signal, the pulse signal sent to the IO-6 pin can be used as the trigger source. Users can select as the trigger source of the corresponding function in the menu.

【Trigger2-out】: The output trigger signal, when the instrument generates a trigger signal, the pin7 generates an pulse signal.

6.14 Analogue Function (Ext-Program) (Optional)

The interface expansion slot provided on the rear panel of the IT7900E series. This function is not standard with the instrument and is optional for users.

When the interface card selected by the user is RS232+Analog interface (IT-E177), the analog interface can realize the external analog function.

- Remotely control voltage
- Power amplifier function
- Remotely monitor voltage and current values

The pins description is as below.

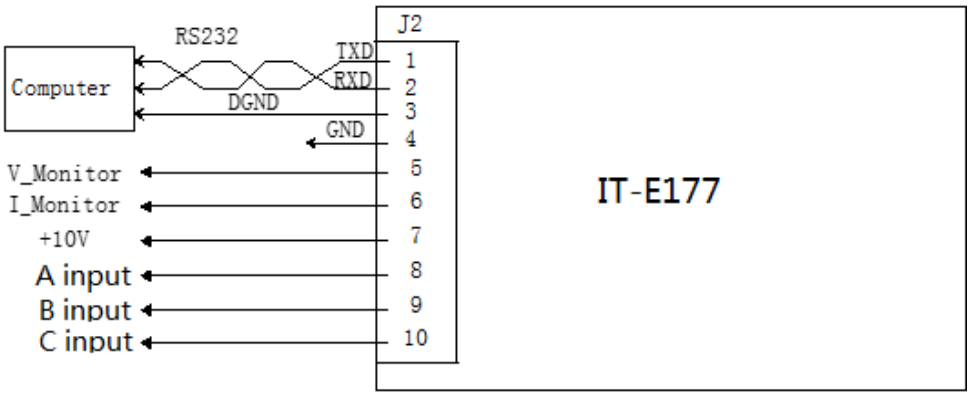

Pins	Name	Description
4 pin	GND	Grounding of analog signals,
5 pin	V_Monitor	Monitor voltage. When output is DC, –10V ~ 10V voltage value to monitor the output or absorption voltage between negative full range and positive full scale. When output is AC, 0-10V voltage value to monitor the 0 to full scale.
6 pin	I_Monitor	Monitot Current. When output is DC, –10V ~ 10V voltage value to monitor the output or absorption voltage between negative full range and positive full scale. When output is AC, 0-10V voltage value to monitor the 0 to full scale.

Pins	Name	Description
8 pin	A input	Set the voltage of A phase. When output is DC, –10V ~ 10V voltage value to set the voltage between negative full range and positive full scale. When output is AC, 0-10V voltage value to set the 0 to full scale.
9 pin	B input	Set the voltage of B phase. When output is DC, –10V ~ 10V voltage value to set the voltage between negative full range and positive full scale. When output is AC, 0-10V voltage value to set the 0 to full scale.
10 pin	C input	Set the voltage of C phase. When output is DC, –10V ~ 10V voltage value to set the voltage between negative full range and positive full scale. When output is AC, 0-10V voltage value to set the 0 to full scale.

Enable/disable analog control

The user needs to select the corresponding function settings in the System menu. The detailed parameter description is as below.

External program	External analog function	
	Status	Set the ON/OFF state
	Mode	● AM: Adjust the amplitude ● Amplifier: Monitor the real-time output values
	Monitor phase	When under 3-phase mode, select the phase to be monitor. Invalid under single phase mode.
	U ratio	Set the ratio between the external signal and the output voltage. Can be set to 50V/1 or 100V/1
	I ratio	Set the ratio between the external signal and the output voltage. Can be set to 5A/1 or 10A/1

1. Press the composite keys [Shift] + (System) on the front panel to enter the system menu.
2. Press the up/down key or rotate the knob to select **Source->External programme** and press [Enter].

   Set the External control state and control mode, press [**Enter**].

Remote Control

Through the analog input interface, the analog signal can be input to remotely set the output voltage value or power amplification function. For the detailed function definition of the pin, please refer to the definition of the analog pins description. The following is an example of amplitude modulation to introduce how to connect and how to use.

When the voltage setting is controlled through the analog interface, the external voltage (-10V ~ 10V) is connected to program the voltage value between 0 and full scale(AC mode).

For example, analog control AC range of 0~350V voltage, when the analog signal voltage is set to 5V, the voltage ratio set to 50V/1 under source menu, the instrument output voltage is set to 5*50=250V.

When parallel machine operation, can be controlled through the host analog interface.

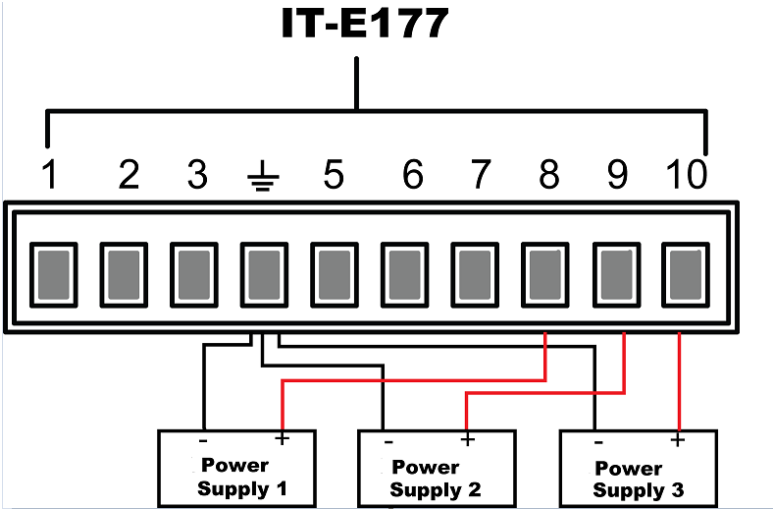

Power Amplification

Analog signals can be input through the analog input interface and power amplification function can be realized. The operation method is as follows:

Connecting the analog interface, different interface function are different, please refer to pins description as above.

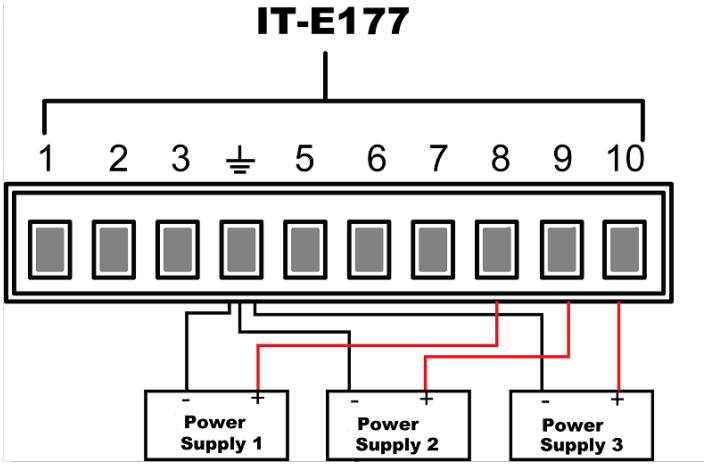

Voltage and current monitoring

Through the analog interface, the existing output voltage/current can be monitored. Connect a digital voltmeter or oscilloscope between pin 54 (V_Monitor), pin 6 (I_Monitor) and ground wire 4 (GND) of the analog interface. The -10V ~ 10V voltage reading corresponds to the power voltage and current output between negative full range and positive full scale (For AC, 0 to 10V corresponds to 0 to full scale). The wiring diagram is shown in the figure below.

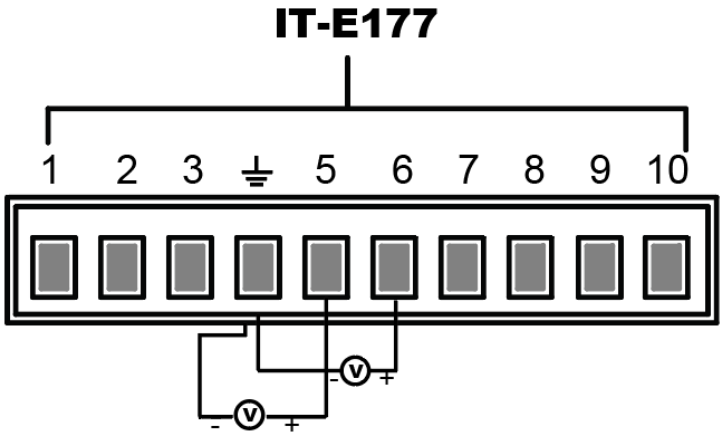
IT-E177
1
2
3
5
6
7
8
9
10
-
+
-
+

Chapter7 Current Source Mode Operation

When the user sets the device operation mode to Current Source mode in the system menu, the instrument is a constant current source. This chapter describes the functions and features of the instrument in Current Source mode.

Only Normal function and List function are supported in constant current source mode, and the function usage is similar to voltage source.

7.1 Select the Power Supply

The IT7900E series instrument can be used as an AC constant current power supply. In the current source mode the power supply supports only single phase and reverse phase modes.

The operation steps are as follows.

1. **Press [Shift]** + (System) enter to system menu.
2. Under the **Source** setting interface, touch the screen or rotate the knob to select the **Phase** and set the power supply phase mode.

Single Phase

Under the single phase, the power supply works as a single phase power supply. the output mode can be set to AC/ AC+DC.

Reverse Phase

Under the reverse phase, the power supply works as a single phase power supply, and the rated voltage will be extended to 200%. For example, AC power supply rated voltage is 350V, under the reverse phase mode, the reted output voltage is 700V. And the output mode can be set to AC/AC+DC.

7.2 Select the Output Mode

The IT7900E series has four output modes: AC, DC, AC+DC, DC+AC. It not only provides pure AC/DC output, but also can use AC+DC and DC+AC output modes to realize "AC output plus DC bias" And "DC output waveform with ripple", which cover a wider range of applications.

The output mode can be select in the system menu.

1. **Press [Shift]** + (System) enter to system menu.
2. Under the Source setting interface, touch the screen or rotate the knob to select the **[Output couple mode]** and set the output mode.

7.2.1 AC Output Mode

If the output mode select to AC Mode, the instrument will simulate AC power supply. The default set of IT7900E series power supply is AC Mode.

Set the output parameters of the power supply in the main interface, including the output voltage, output frequency.

- Press up/down keys to select setting value and then press **Enter** to confirm.
- Rotate the knob to select setting value and then press **Enter** to confirm.

- Touch screen and then press **Enter** to confirm.

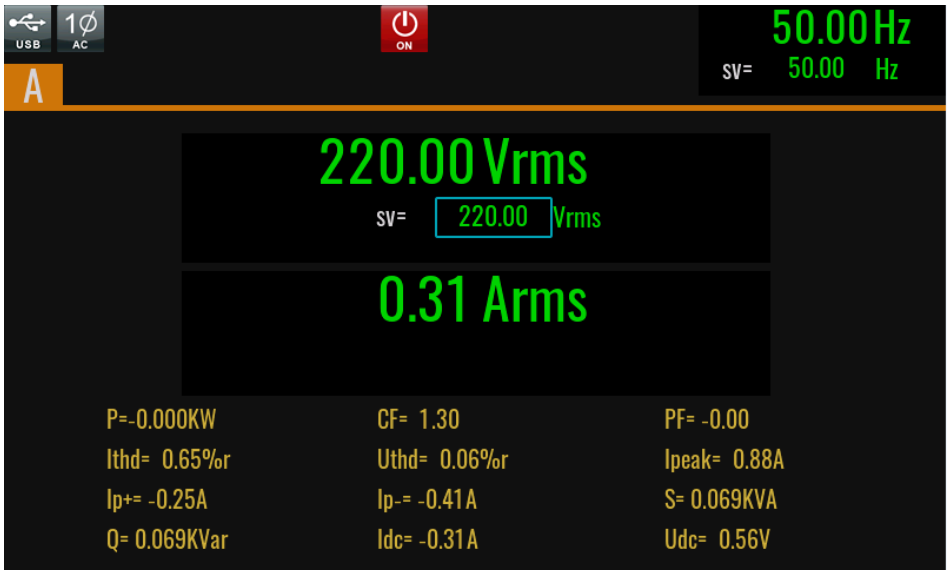

7.2.2 AC+DC Output Mode

If the output mode select to AC+DC Mode, the instrument will simulate AC and DC power supply, which can add DC component to AC voltage. Set the output voltage in the main interface, as shown in the figure below.

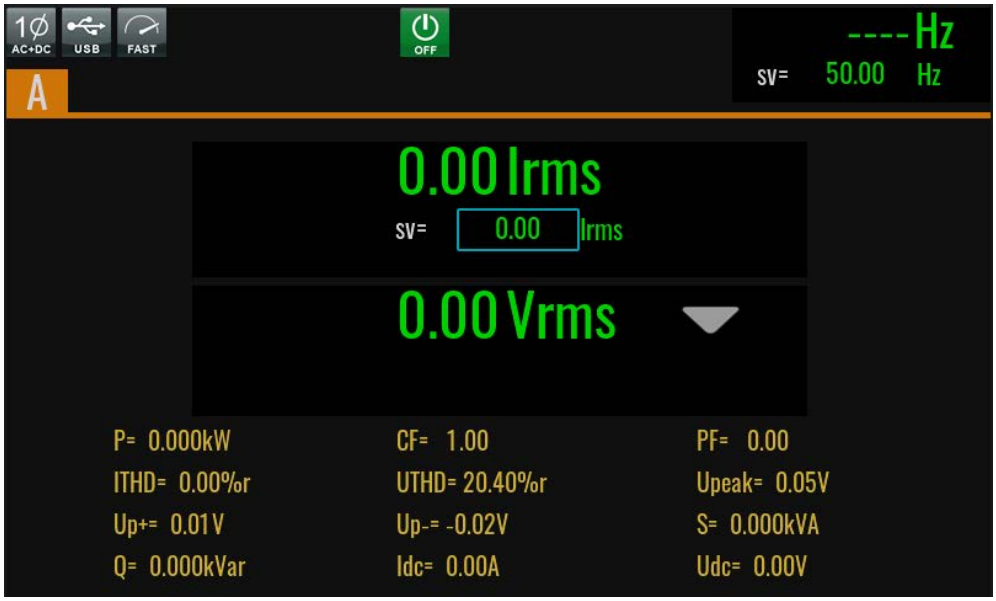

Under AC+DC mode, Set the output voltage and frequency of the AC power supply in the main interface, and set the DC voltage in the configure menu.

- Vac: you can set the Vac under the main interface or under the config interface.
- DC: set the DC component under the config interface.

Chapter8 Measurement Functions

This chapter describes the characteristics and operations of the basic metering function of IT7900E series source.

IT7900E series source has rich functions of basic metering of electric energy and can accurately measure the parameters such as Vrms, Irms, Ipeak, Idc, CF, PF.

8.1 Meter Mode

Press on the front panel to enter the metering interface. Different modes display different interfaces, but the displayed measurement parameters are the same. Take AC single-phase mode as an example, the measurement interface is shown in the figure below.

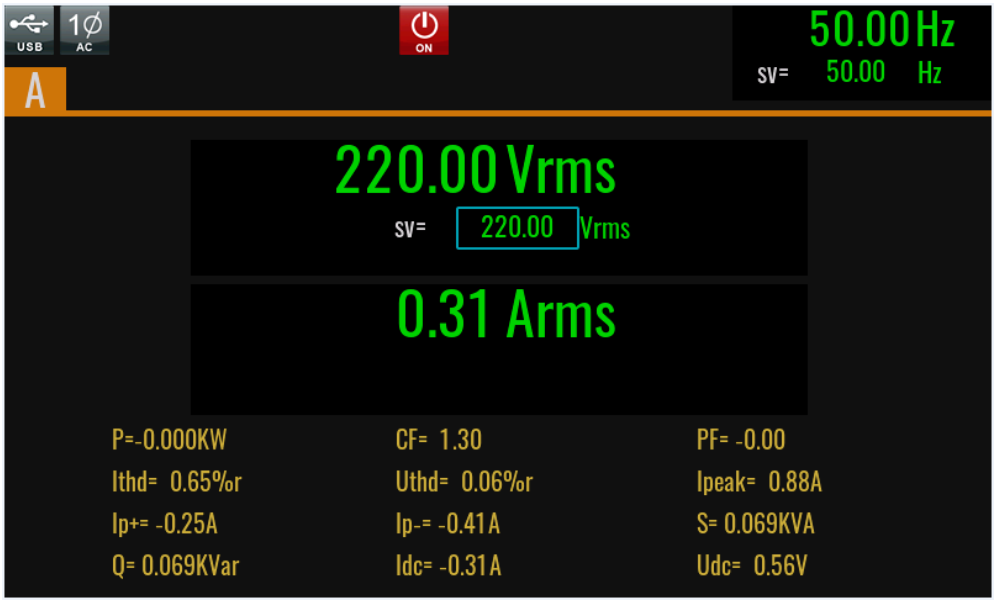

Description of the metering parameters:

Parameter	Description
A	Single mode
Voltage Vrms	Setting voltage AC/ACDC mode: Vac setting value DC/DCAC mode: Vdc setting value
Frequency Hz	Setting frequency Only valid in AC/ACDC/DCAC mode.
P	Active power [W]
PF	Power factor
CF	Crest factor
Ithd	Current THD
Uthd	Voltage THD
Ipeak	Current peak value [A]
Ip+	Positive current peak value [A]
Ip-	Negative current peak value [A]

Parameter	Description
S	Apparent power
Q	Reactive power
Udc	DC voltage
Idc	DC current
Sa	Total three-phase apparent power
P∑	Total three phase Active power
PFa	PFa=P_total/S_total

8.2 Oscilloscope Mode

IT7900E series source has the function of displaying the waveform based on sampling data. The user can select to display or hide the voltage and current waveform of the input unit. Only the necessary waveform is displayed, which can facilitate observation. The waveform display interface includes the vertical axis and horizontal axis.

Press on the front panel and the following waveform display interface will appear. Different modes display different interfaces. the Oscilloscope interface is shown in the figure below.

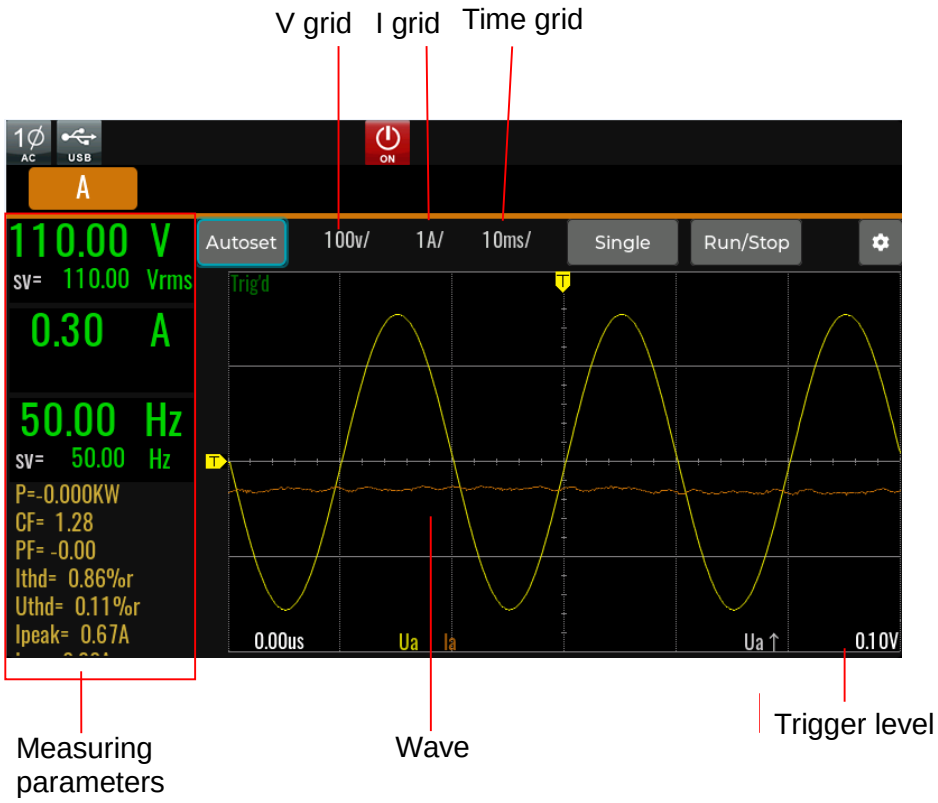

Description of keys on the waveform display interface:

Voltage/Current/Time: Adjust voltage/current/time base range

Single: Single measurement key: when single measurement is enabled in the Stop status, the stop status is enabled again after one measurement based on the current data updating rate. When single measurement is enabled in the Ready status, the instrument immediately restarts one measurement

and then enters the Stop status.

Run/Stop: press the corresponding soft key to run or stop the waveform status.

AutoSet: Automatically adjusts the scale of the appropriate vertical axis.

: Advanced configuration options for oscilloscope function.

- Trigger source: Select trigger source, Voltage/Current and rise edge or fall edge can be select.
- Trigger mode: Auto and Normal can be select.
- Print data: save the data
- Line selection: Select the displayed curve, which is used to select whether to display the voltage/current waveform of the corresponding phase. Up to 6 oscillographic data curves can be displayed.

U↑ : Voltage trigger setting

Vertical calibration

The voltage range and current range are subject to vertical calibration (voltage/scale and current/scale). Press the soft key **[Function]** and select Volt-Range or Curr-Range. Rotate the knob to set the voltage or current range of each interval.

Horizontal calibration

If the soft key **[Function]** is pressed and “Trig-TimeBase” is selected, you can rotate the knob to adjust the horizontal scale (scanning speed). When the horizontal (time/scale) setting is changed by rotating the knob, you can observe the change of time/scale on the screen. During data collection, the sampling speed can be changed by adjusting the horizontal calibration knob. After collection is stopped, the collected data can be amplified by adjusting the horizontal calibration knob.

Trigger waveform

When the specified trigger conditions are satisfied, the trigger waveform will be displayed. The triggering time is the trigger point, generally on the right of the screen. When the trigger point is reached, the screen will display the waveform from left to right over time. The user should set the following parameters before using the trigger function.

- Trigger mode

  The trigger mode refers to the condition to update the contents on the screen. It is divided into the Auto mode and Normal mode. In the Auto mode, the displayed waveform will be updated when triggering occurs in the suspension time; otherwise, the displayed waveform will be updated automatically.

  In the Normal mode, the displayed waveform will be updated in the case of triggering and not updated in the case of no triggering.

- Trigger source

  The trigger source is used for generating trigger conditions. The user can select the trigger source in the input signal of the input unit.

- Trigger slope

  The slope refers to the change of the signal from low level to high level (rising edge) or from high level to low level (falling edge). The slope used as a trigger condition is referred to as the trigger slope.

- Trigger level

  The trigger level refers to the level which the trigger slope passes through. If the signal of the trigger source passes through the set trigger level according to the specified trigger slope, triggering occurs. When the soft key **[Function]** is pressed and “Trig-Level” is selected, you can rotate the knob to adjust the trigger level. In this case, the trigger level can be changed by rotating the knob and you can observe trigger level changes on the screen.

Print data

In the advanced menu, users can select the Print Data item and select the data logging mode. Data of oscilloscope interface will be recorded to U disk.

Print data mode:

- Off: turn off the print data function.
- Post: The recorded data is consistent with the data displayed on the oscilloscope interface
- Raw: The recorded data is original data, The default data sampling interval is 10us
- Both: Post and Raw, record two data file.

8.3 Harmonic measurement

IT7900E series source can display harmonic parameters in the list or bar chart form to make the analysis of test result clear.

8.3.1 Harmonic measurement

Press key on the front panel, and the following initial interface of harmonic measurement will appear.

- Harmonic bar chart screen

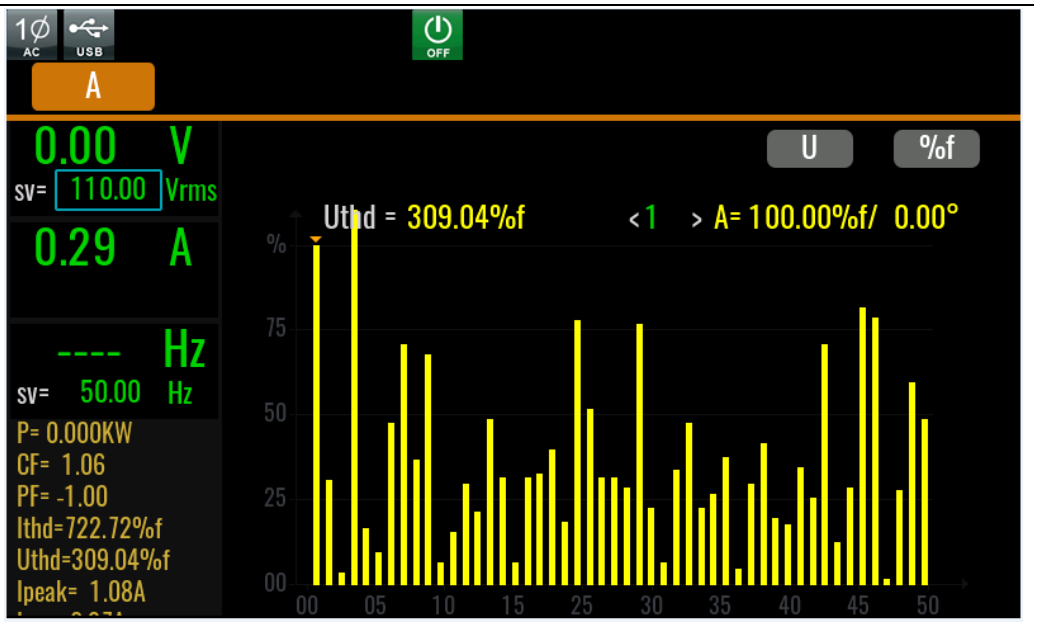

Description of keys on the harmonic display interface:

U / I: Select the voltage/current harmonic

%r: Distortion factor calculation formula.

%r: displaying harmonics in the form of percentage to the overall voltage amplitude of all harmonics.

%f: displaying harmonics in the form of percentage to the fundamental voltage.

THD: Under single phase mode, display total harmonic distortion of the single phase. Under three-phase mode, display total harmonic distortion (THD) factors corresponding to Phase A, B and C.

Single harmonic parameters: Under single phase mode, display single harmonic distortion factor and phase of the single phase. Under three-phase mode, display the single harmonic distortion factor and corresponding phase. Rotate the knob to select the number.

- Harmonic list screen

  When LIST mode is selected in the harmonic measurement mode, the list of harmonic measurement results will be displayed, when “U” is selected, the list will display the voltage and phase values under various harmonics. When “I” is selected, the current and phase values will be displayed. Under single-phase mode, the list only displays measurement results for Phase A, and displays 0 for the other two phases, as shown in the figure below; under three-phase mode, display effective values for the three phases.

Harmonic number list: the signal data of 0-50th harmonic(s) will be shown in the LIST. You can press the Up and Down key to display the hidden rows, i.e. hidden data of single harmonic data.

- Introduction to vector interface

  When vector mode is selected in the harmonic measurement mode, to enter the vector measurement interface, as shown in the figure below.

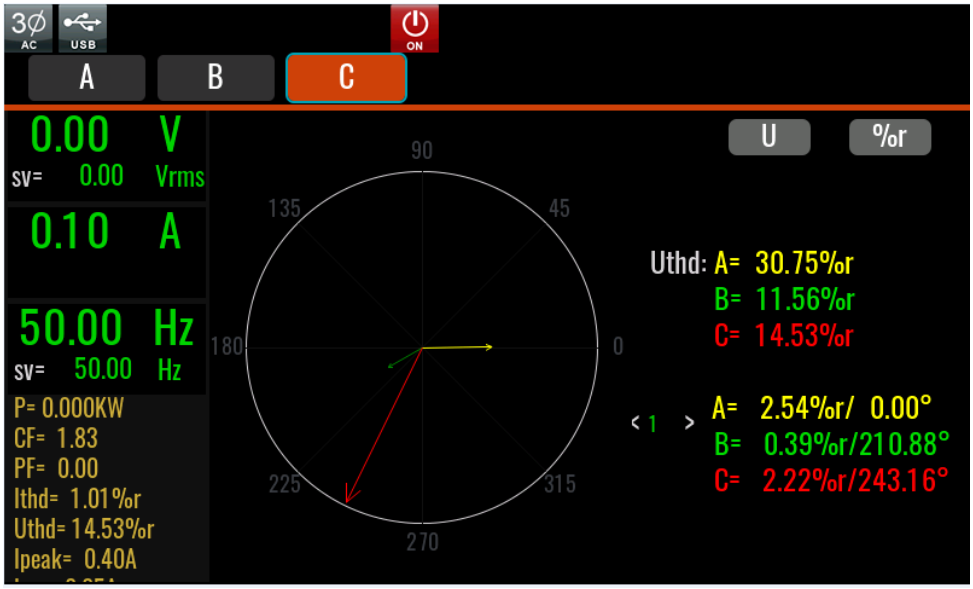

8.3.2 Harmonic Analysis

This series of instruments can set the analysis conditions during harmonic measurement, filter the harmonic measurement data according to the set conditions, and mark the corresponding non-conformities in red. It is convenient for users to do harmonic test analysis. The set conditions can be THD value of voltage and current, THC, POHC, PWHC and IEC61000-3-2/IEC61000-3-12 regulation items.

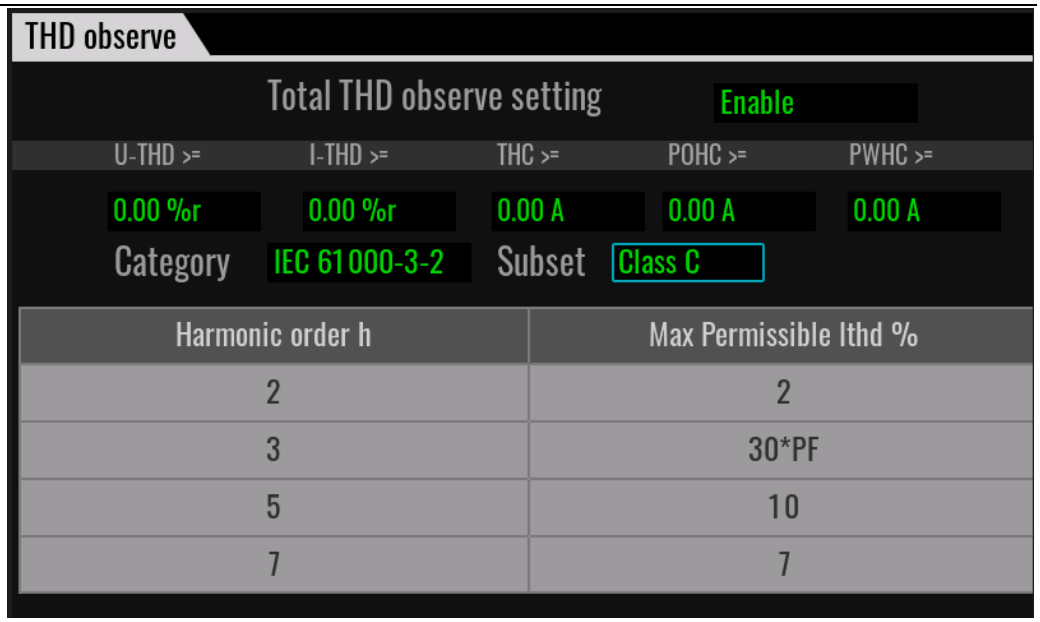

Item	Description
Total THD observe setting	THD interface observation switch, this setting is globally effective and takes precedence over each regulation module setting item. Enable: Harmonic analysis according to conditions Disable: Does not perform harmonic analysis
U-THD	Total harmonic distortion of voltage
I-THD	Total harmonic distortion of current
THC	total harmonic current (The total rms value of the harmonic current components of order 2 to 40)
POHC	Partial odd harmonic current
PWHC	Partial weighted harmonic current
Catagory	Category of Regulations
Subset (IEC61000-3-2)	Class A: Harmonic order h Max harmonic current Ih/Iref Class B Harmonic order h Max harmonic current Ih/Iref Class C Harmonic order h Max Permissible Ithd% Class D Harmonic order h Max Permissible Ithd per watt mA/W Max harmonic current Ih/Iref Note: Parameter items are displayed only and cannot be edited

Item	Description
Subset (valid for Self-defined)	I THD U THD U/I THD 1.Form parameter items can be edited, 51 parameters can be edited 2. I THD or U THD title suffix %f/%r dynamically changes according to the harmonic interface configuration items 3. I THD/ U THD, The parameter value is set to -1 to delete the current edit line parameter 4. After editing the parameters, sort them dynamically from smallest to largest by harmonic order h settings
Type (IEC61000-3-1)	Phase type Non-balance 3-Phase Balance 3-Phase Balance 3-Phase(a,b,c) Balance 3-Phase(d,e,f) Note: Table parameter entries are displayed only and are not editable.Iref: reference current, Ih: harmonic current component
Rise (IEC61000-3-12)	Minimum short-circuit ratio limit value

After setting, press Esc to return to the harmonic measurement interface, and the instrument measurement interface will display the results after harmonic analysis.

8.4 Recorder Function

The data recording function allows you to observe and record output status data for a long time. On the recorder interface, you can select a maximum of six data curves to be displayed.See the figure below.

Stop: Stop refresh data.

Clean: Clean all of data curve.

More: Enter to the advanced menu to set more parameters.

- Viewing control: Select the data curve, up to 6 curves can be select.
- File format: select the file format, include Tdms and CSV.
- Export to udisk: exporting all of present data to U disk.
- Meter sample: Set the sampling interval.

Hold-On/Hold-Off: Pause screen data refresh (for data observation)/ Start dynamically observing the data

Auto: Automatically adjusts the scale of the appropriate vertical axis.

Time: The time value of each of the horizontal coordinates, unit is s/Div

Vernier: Position information of the vernier caliper.

Chapter9 Configuration Arbitrary Waveform

This chapter will introduce configuration of arbitraryny waveform of IT7900. Besides the five standard waveforms (see 5.6 Waveform Selection) built in the main interface, the user can enable the outputting of AC wave sequences of different amplitudes through List and self-define function.

9.1 List Function

At maximum of 200 steps can be edited for each List file. The user can choose any waveform from existing 11 waveforms. Or, the user can choose a waveform file stored in the device through self-define function (see 8.3 “Self-defined Waveform Function” for details) and combine the waveform files into a List file based on required order. Meanwhile, the user can set the starting steps of the List file, run count and end state of the waveform, and edit parameters such as frequency, amplitude, running time and rising slope of each waveform.

9.1.1 Create a new List file

Create a new single-phase List file

Under single-phase mode, the user can output AC waveform sequences with different amplitudes by creating a new List file. Detailed operation steps are as below:

1. Press [Shift]+[V-set](**list**) on the front panel to enter the List function configuration interface, as shown in the figure below.

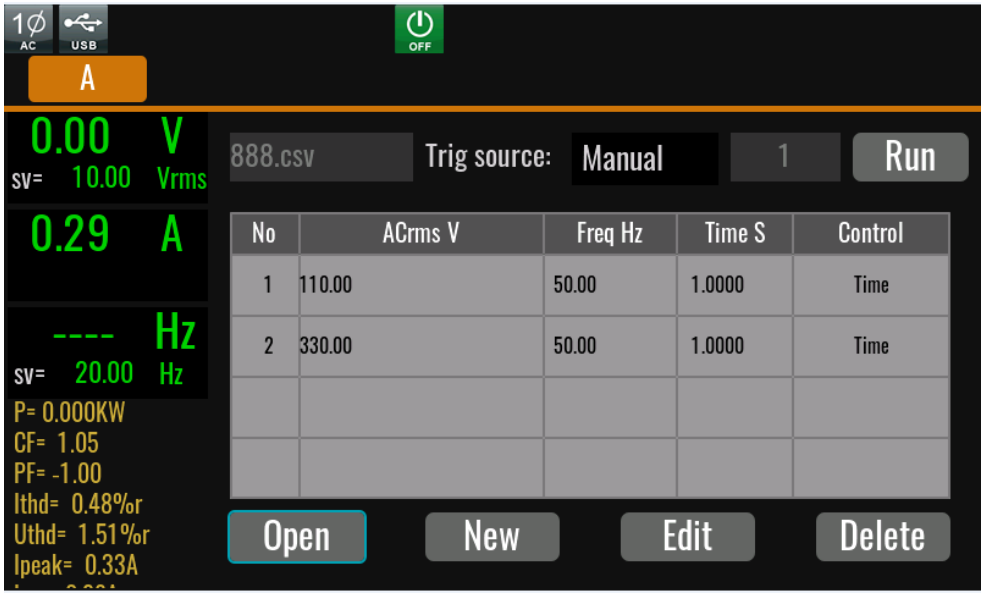

888.csv: the list file name to execute.

Trig source: select the trigger source

Run/Stop: Run/stop the list function.

Open: Select the List file to execute.

New: Create a new List file.

Edit: Edit present list file

Delete: delete the present List file.

2. Press **[New]** and enter to the List file edit interface.

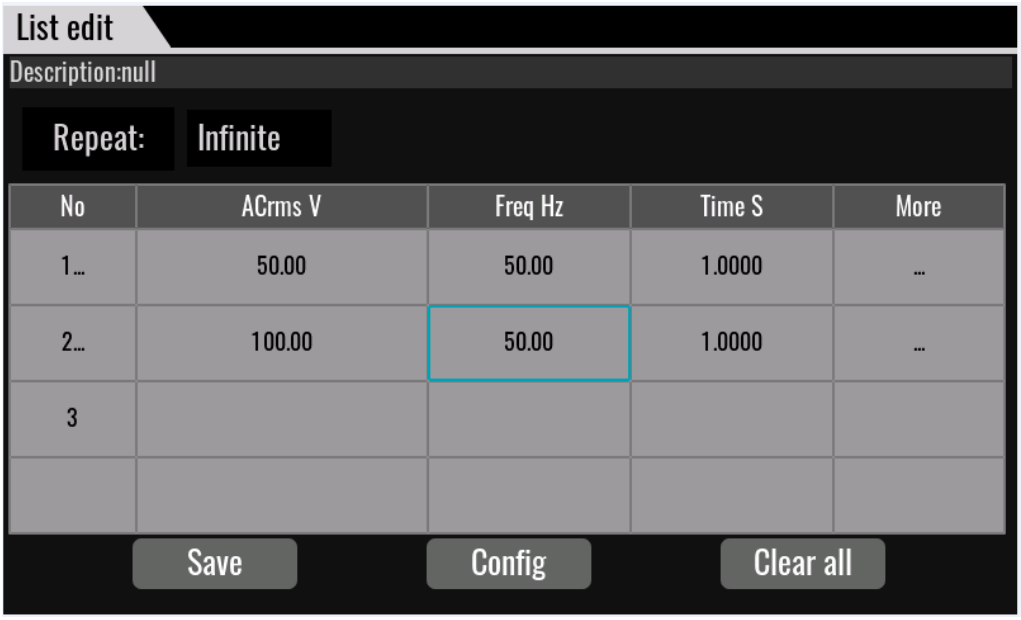

List edit description:

Description: Description of List, display list file name.

Repeat: Edit the cycles of the List file.

End: Set the final waveform, with the following options available:

- Off: directly off the output after operation.
- Normal: return to normal after operation.
- Last: keep the last waveform output unchanged after operation.

No.: step number of list. Click the numer, you can operate such as copy/paste/cut/insert/delete.

ACrms V: Voltage RMS value

Freq Hz: Frequency

Time S: width time, range from 0.0001s to 42949s

More: other settings, click … and setup the slew rate, waveform,phase and so on

Export: Export the internal List file of the instrument to an external USB flash drive.

Save: Save the list file.

Config: configure the list file to make it effective.

Clear all: delete all of step information

Trig source: select trigger source

3. Click (More)… enter to advanced menu of list file.

List parameters description：

Voltage AC	Voltage value and slope.
Start Phase	Start phase setting, displayed in AC mode. By default, the program automatically calculates this value (which is guaranteed to be continuous with the previous step). If the user modifies this parameter, the user set value is used without guarantee of continuity.
Phase Difference	Phase difference between ABC, only displays in AC 3-phase mode.
Frequency	Frequency and slope, displayed in AC mode.
Waveform	Waveform type, every basic waveform can be selected, displayed in AC mode.
Step jump	Method of step jumps to next step. Time: when the time is out, jumps to next step Trig: receive a trigger signal, jumps to next step. Phase: jumps to next step at this phase.
Trig out	Whether outputs a signal when this step is ending.

4. Press **[Esc]** to return Edit interface, Press **[Save].**

   At list Edit interface, click the step number, the **[Insert]/[Paste]/[Cut]/[Copy]/[Delete]** will display, click the key to edit.

5. Press [**Esc**] to return.

9.1.2 Select/Run List File

If several List files are edited, press Recall to recall the List file to be tested. Detailed operation steps are as below:

1. Press **[Shift]+[V-set](list**) on the front panel to enter the List function configuration interface.
2. Press **[Open]**, select the saved List01 csv file, and press **[Enter]** to enter the file.
3. Press **[On/Off]** on the front panel, turn on the output.
4. Press **[Run]** in the list function interface.

5. Running indicator will appear in interface.

   Press **[Scope]** key to view the output waveform.

9.1.3 Import/Export List file

Import List file

IT7900 series support import list file function, The user can finish the editing of List file in Excel and import it into the software. This function simplifies the List file edit and facilitates user operation.

To help user define an Excel file format, please export a CSV template from the List interface.

Detailed operation steps are as below:

1. Create a new Excel document on local PC and name it List02.
2. Open the Excel document and save it as in “other formats” i.e. “(*.csv)”.
3. Open the List02.csv document and edit the List. Set every step of the List and corresponding parameters and save the document in the USB disk.

List import file formats under single-phase mode:

	A	B	C	D	E	F	G	H	I	J	K	L	M	N	O	P
1	Model	IT7815-350-90														
2	Firmware	000.000.223														
3	Serial Nu	8.04E+17														
4	Phase mod	1-Phase														
5	File Type	List														
6	Repeat	0														
7	End State	Off														
8	Total Cou	3														
9	Trig Sour	Manual														
10	Save Type	Local														
11	No	A Vac V	A Vac sle	A Vdc V	A Vdc sle	A Wavefor	A Start p	Frequency	Frequency	Running m	Time S	Trig out	Step mode	Trig phas	End phase	Trig mode
12	1	33	1000	0	1000	Sine	0	50	1000	Time	1	0	Continue	0	0	Imme
13	2	22	1000	0	1000	Sine	0	50	1000	Time	1	0	Continue	0	0	Imme
14	3	11	1000	0	1000	Sine	0	50	1000	Time	1	0	Continue	0	0	Imme
15																
16																

4. Insert the USB disk into the USB interface of the front panel. Press [Shift]+[V-set](**list**) on the front panel to enter the List function configuration interface.
5. Press [Open]. Select the List02.csv file and open it. The List file will be imported.

Export List file

After editing the List file, the user can directly save it into the device or export and save it into the peripheral memory disc. The exported List is saved in the format of. (*.csv). Detailed operation steps are as below:

1. Insert the U disk into the USB interface of the front panel.
2. Press [**Shift**]+[**V-set**](**list**) on the front panel to enter the List function configuration interface.
3. Select [**Edit**], enter to list file edit interface.
4. Press [**Export**]. This file will be exported into the USB disk.

9.2 Setting of Surge/Sag Configuration

IT7900 provides surge/sag simulation. The user can add surge/sag to simulate abnormal voltage fluctuation on the basis of outputting wave, and test usage of the DUT under this circumstance.

Surge/sag can be added to any waveform, the basic waveform is selected from the Config menu.

The Surge/Sag function is not supported in multi-channel mode.

NOTE

When using the dimming function, this function will automatically turn off, and when using this function, dimming function is turned off.

Operating steps

1. Press **[Shift]**+ (Surge&Sag)on the front panel to enter the List function configuration interface.

2. Set the voltage and frequency parameters in the sweep interface.

   Parameters in the sweep interface are described as follows:

Parameter	Description
Mode	surge/sag executing mode. Trig: Trigger mode. Executing the surge/sag after receiving the trigger signal. Period: Period mode. Execute the surge/sag based on the period.
Action	This setting is valid when the mode select to Trigger. Imme: Executing the surge/sag immediately. Angle: Executing the surge/sag at specific angle.
Trig source	Select the trigger source when the mode select to Trigger.
Start angle	Set the start phase angle of the surge/trap when the mode select to trigger.
Angle width	Set the period of the surge/trap. For example, start angle=30 degree, Angle width=30 degree, then, the waveform will execute surge/sag at 30 to 60 degree.

Parameter	Description
Symmetry	Whether to produce symmetrical surge/sag waves. If Start angle + Angle width >180°,this setting is Off state.
Repeat count	repeat count of surge/sag waves.
Period count	Number of cycles to generate surge/sag waves. This parameter is meaningful only in Peroid mode. This setting is used in combination with Repeat count, for example, if **Repeat count** is set to 5 and **Period count** is set to 10, five surge/sag waves occur in every 10 cycles.
Enable	Phase A/Phase B/Phase A&B/Phase B&C/Phase A&C/PhaseA&B&C: Select the phase information where the surge/notch occurs.(displays under 3-phase mode)
Enable	Synchronize: Each of the three phases executes surge/trap at the same time. Specify Phase: Each of the three phases executes surge/trap at the specified phase. (displays under 3-phase mode)
Value select	Value select: Percent: Set the percentage of the surge/trap amplitude to AC signal amplitude (RMS). Setting: Set the value of the surge/trap amplitude.

3. Press [On/Off] on the front panel and enable the output.
4. Press [Run] on the interface, Then the running status will be displayed on LCD. Output parameters and measurement parameters are displayed on the left side of the interface. You can also press the Meter to observe the output parameters in the main interface.
5. After execute, [On/Off] on the front panel will be off, and running status will be displayed on LCD. You can press [Stop] on the interface to stop the surge/sag function.

9.3 Self-defined Waveform Function

In AC mode or AC+DC mode, you can customize waveform curves and save them locally as output waveform options. This self-defined waveform can be used as a normal output waveform or as a wave option for scanning waveform, Surge/Sag waveform, and LIST waveform.

9.3.1 THD

The distorted waveform can simulate voltage harmonic wave in the circuit. The user can set the extent to which the output voltage waveform deviates from the Sin wave voltage and test the usage of the DUT under this circumstance.

THD includes built-in 30 waveforms and user - defined waveforms.The interface is shown below.

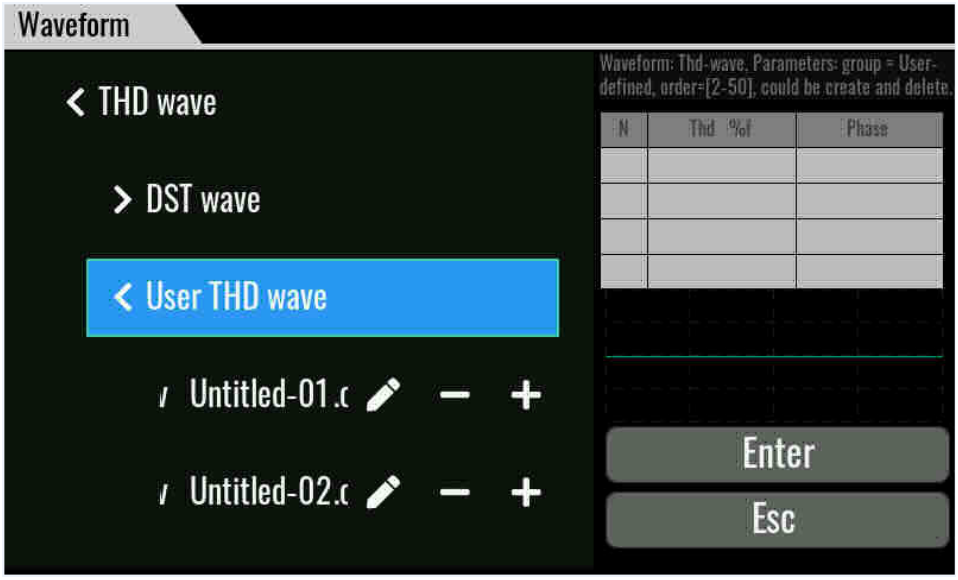

DST wave: Select waveforms which built into the instrument by default. When the waveform name is selected, the parameters and waveform diagram are displayed on the right side of the interface.

User THD wave: THD wave of user defined.

"+" Create a new THD wave.

"-" Delete the seleted THD wave.

"/" Edit the THD wave.

Press the "+" or "/" enter to the edit interface.

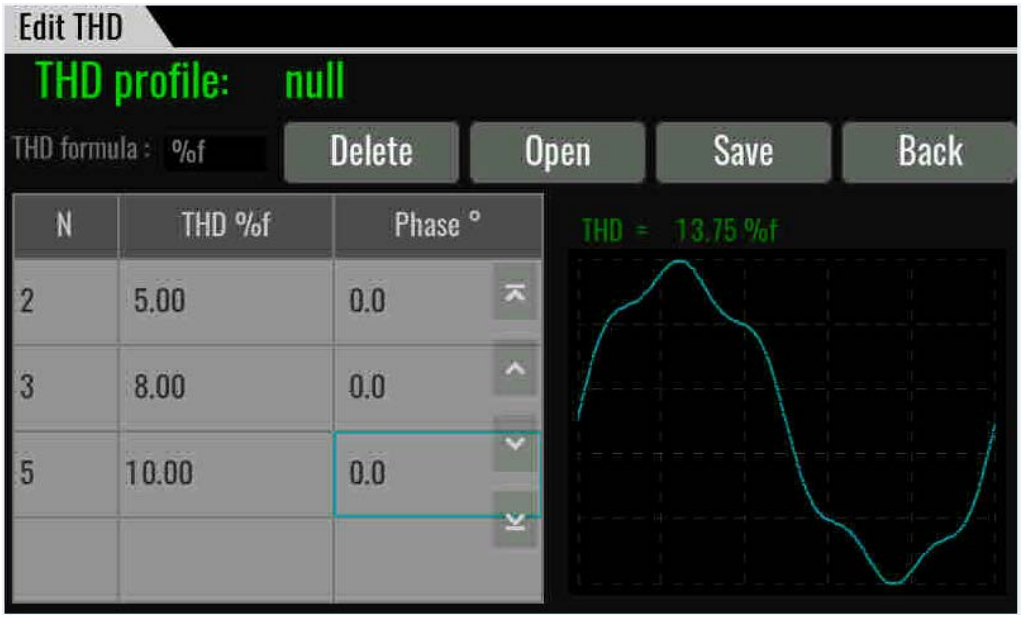

Thd profile: THD file name

Thd formula: Distortion factor calculation formula.

%r: displaying harmonics in the form of percentage to the overall voltage amplitude of all harmonics.

%f: displaying harmonics in the form of percentage to the fundamental voltage.

Delete: select a row and click Delete.

Open: import Thd wave data.

Save: Save the THD wave.

Back: return back upper menu.

THD=: Total distortion rate calculated based on the user Thd configuration.

Import THD file

A	B	C	D
Model	ITxxxx	Device_operation	0
Usage	Wave		
Name	Untitled-01.csv		
Type	8		
Editable	1		
Formula	0		
Unit_number	39		
Fund_phase	0		
Order	Thd	Phase	
2	5	0	
3	9	180	

Users can edit a custom harmonic waveform file in .csv format and import it into the instrument. User defined harmonic waveform template files can be obtained by contacting ITECH, or an empty file can be exported directly from the instrument.

The harmonic waveform template description as follows:

Model: instrument model, Keep default.

Device_operation: operation mode of instrument, 0: voltage source, 1: load, 2: current source, Users are cautious to modify, the waveform files are not common in different modes.

Usage: Usage, keep default

Name: keep default

Type: Waveform type, harmonic custom waveform is 8, which must be 8 in this file.

Editable: keep default

Formula: Harmonic calculation formula, 0 represents f%, 1 represents r%

Unit_number: The number of data points edited needs to be consistent with the number of data rows.

Fund_phase: phase of fundamental waves, range from 0-360°

Order: harmonic order, range from 2-50

9.3.2 User-defined waveform

“+” create a new wave.

“-” delete the wave file.

“/” edit the wave file.

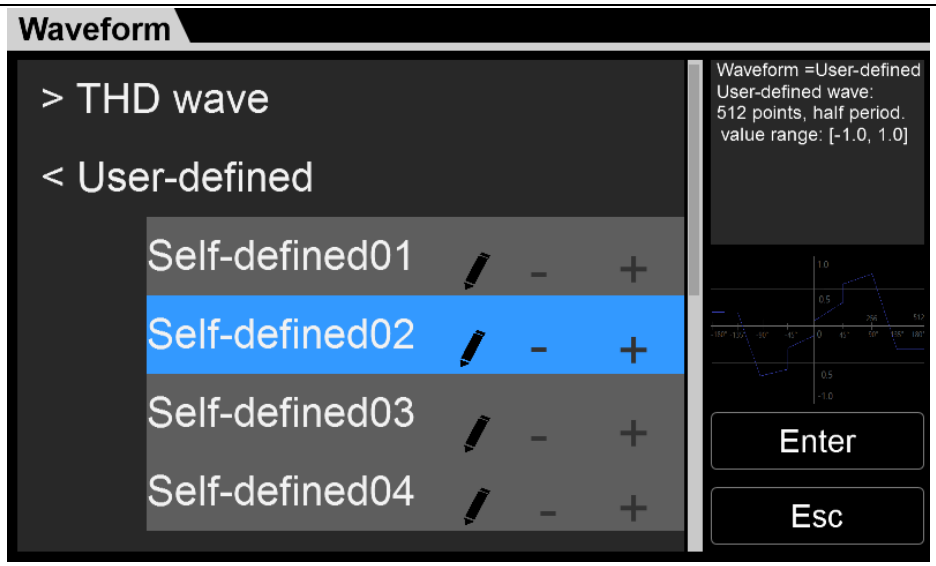

Edit interface:

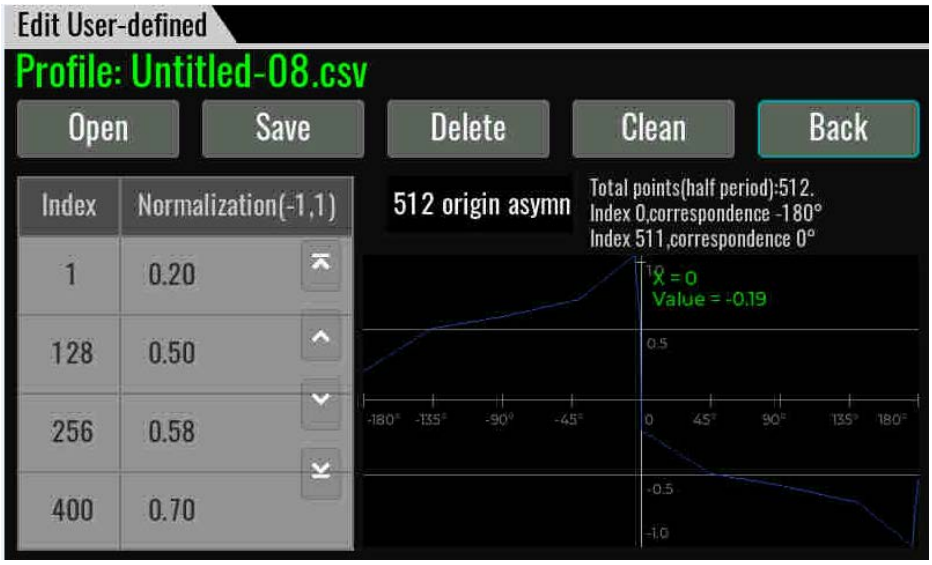

Profile: user-defined file name

Origin Symmetry: To select the waveform data type, you can select 512 origin symm/512 origin asymm /1024 points

Open: import waveform data.

Save: Save the user-define wave.

Delete: select a row and click Delete.

Clean: delete all of data

Back: return back upper menu.

Import user-define waveform file

A	B	C	D
Model	IT7800	Device_operation	0
Usage	Wave		
Name	Userdefine.csv		
Type	9		
Editable	1		
Point_number	1024		
Origin_symm	2		
index	fval		
0	0		
1	-0.0184		
2	-0.0368		
3	-0.0552		
4	-0.0736		
5	-0.0919		
6	-0.1102		

Users can edit a user-defined waveform file in .csv format and import it into the instrument. User defined harmonic waveform template files can be obtained by contacting ITECH, or an empty file can be exported directly from the instrument.

The user-defined waveform template description as follows:

Model: keep default

operation mode of instrument, 0: voltage source, 1: load, 2: current source, Users are cautious to modify, the waveform files are not common in different modes.

Usage: Usage, keep default

Name: keep default

Type: Waveform type, user-defined waveform is 9, which must be 9 in this file.

Editable: keep default

Point_number: The number of data points to be edited, which needs to be consistent with the data row in the table. Associated with the Origin_symm parameter.

Origin_symm: symmetry option, 0 represents 512 non-origin symmetry, 1 represents 512 origin symmetry, 2 represents 1024 points.

Index/fval: Data points and detailed parameter values.

9.4 Interharmnics function

Users can click the Interharmonics icon in the Menu interface to enter the Interharmonics function interface and edit the parameters such as interharmonic components to simulate the interharmonic output waveform.

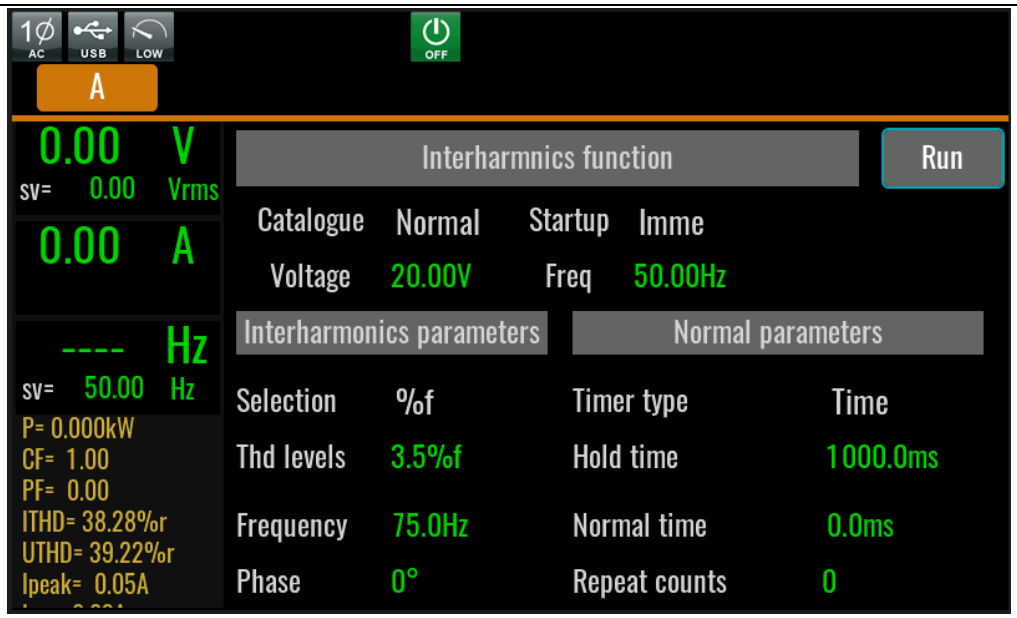

Parameter descriptions of the interharmonic interface

Catalogue: Function category selection, Normal general mode, Sweep scanning mode.

Startup: start mode, select to Trig or Imme.

Trig source: Trigger source, when the Startup is Trig need to set.

Parameter introduction when Normal mode is selected to the function category

Selection: Calculation method selection, %f is equivalent to base wave percentage mode, Voltage direct voltage setpoint mode.

Thd levels: The interharmonic distortion rate setting, depending on Selection, can be a percentage and a voltage setting.

Frequency: Interharmonic frequency setting value.

Phase: Interharmonic phase setting value.

Timer type: Select the timing reference, Time method or Cycle method.

Hold time: Interharmonic operation time. If it is Cycle mode, it is the number of interharmonic operation cycles (Hold cycles).

Normal time: Normal waveform running time. If it is Cycle mode, it is the number of normal cycles.

Repeat counts: The number of times the interharmonics and normal waveforms are run alternately.

Parameter introduction when Sweep mode is selected for the function category

Selection: Calculation method selection, %f is equivalent to base wave percentage mode, Voltage direct voltage setpoint mode.

Thd levels: The interharmonic distortion rate setting, depending on Selection, can be a percentage and a voltage setting.

Start freq: Interharmonic sweep start frequency setting value.

End freq: Interharmonic sweep end frequency setting value.

Timer type: Select the timing reference, Time method or Cycle method.

Step time: Interharmonic scanning step time. If Cycle mode, it is the number of simple harmonic operation cycles (Step cycles).

Step freq: Interharmonic scanning step frequency.

Start angle: Interharmonic start phase angle.

Chapter10 Technical Specifications

This chapter will introduce the main technical parameters of IT7900, such as rated voltage/current/power and so on. Besides, this part will introduce the working environment and storage temperature.

10.1 Supplemental characteristics

Recommended calibration frequency: once a year

Cooling style: fans

10.2 Main technical parameters

IT7921E-350-105

Input parameters				
AC Input	**Wiring connection**	3 phase 3wire + ground(PE)		
	Line voltage	RMS	(200 ~ 220) ±10% *1 (380 ~ 480) ±10%	V
	Line current	RMS	< 47	A
	Apparent power		< 24.4	kVA
	Frequency		45 ~ 65	Hz
	Power factor	typ	0.98	
Output parameters				
AC Output	**Output voltage**	VLN	0 ~ 350	V
		VLL（3phase）	0 ~ 606	V
		VLL（reverse）	0 ~ 700	V
	Output current	RMS（1phase）	105	A
		Crest Factor *2	6	
		Peak（1phase）	315	A
		RMS (3phase/reverse)	35	A
		Peak (3phase/reverse)	105	A
	Output power	Per Phase	7k	VA

		Max. Power (reverse phase)	14k	VA
		Max. Power (1phase/3phase)	21k	VA
	Voltage setting			
	Range	1phase/3phase	0 ~ 350	V
		reverse	0 ~ 700	V
	Resolution		0.01	V
	Accuracy	16Hz ~ 150Hz	< 0.1%+0.1% F.S.	
	Temperature coefficient		< 100ppm/C° F.S.	
	DC Voltage Offset	typ	0.02	Vdc
	Current Limit setting			
	Range	RMS (1phase)	105	A
		RMS (3phase/reverse)	35	A
	Resolution		0.01	A
	Accuracy	16Hz ~ 150Hz	< 0.1%+0.2% F.S.	
	Temperature coefficient		< 200ppm/C° F.S.	
	Frequency			
	Range		16 ~ 150	Hz
	Resolution		0.01	Hz
	Accuracy		0.01%	
	waveform synthesizer	50/60Hz	up to 50	orders
	Phase			
	Range		0 ~ 360	°
	Resolution		0.01	°
DC Output	**Voltage setting**			
	Range	1phase	-499 ~ 499	Vdc

		reverse	-998 ~ 998	Vdc
	Resolution		0.01	V
	Accuracy		< 0.1%+0.1% F.S.	
	Temperature coefficient		< 100ppm/C° F.S.	
	Current setting			
	Range	reverse	-35 ~ 35	Adc
		1phase	-105 ~ 105	Adc
	Resolution		0.01	A
	Accuracy		< 0.1%+0.2% F.S.	
	Temperature coefficient		< 200ppm/C° F.S.	
	Max. power			
	Max. power (reverse phase)	Max. Power (reverse phase)	14k	W
	Total power	Max. Power (1phase)	21k	W
Voltage stability	**Line regulation**		< 0.05% F.S.	
	*3 **Load regulation**	DC,16Hz ~ 150Hz	< 0.05% + 0.05% F.S.	
	THD *4	16Hz ~ 150Hz	< 0.5%	
	Voltage ripple	RMS	< 0.4	V
	*5 **Dynamic response**	typ	200	us
Programmable impedance	**R Range**	3phase	0 ~ 1000	mΩ
		1phase	0 ~ 333.333	mΩ
		reverse	0 ~ 2000	mΩ
	L Range	3phase	0 ~ 1000	uH
		1phase	0 ~ 333.333	uH
		reverse	0 ~ 2000	uH
Islanding RLC	**P Range**	3phase	0 ~ 7	kW

		1phase	0 ~ 21	kW
		reverse	0 ~ 14	kW
	QL Range	3phase	0 ~ 7	kVar
		1phase	0 ~ 21	kVar
		reverse	0 ~ 14	kVar
	QC Range	3phase	0 ~ 7	kVar
		1phase	0 ~ 21	kVar
		reverse	0 ~ 14	kVar
	R Range	3phase	1 ~ 1000	Ω
		1phase	0.333 ~ 333.333	Ω
		reverse	2 ~ 2000	Ω
	L Range	3phase	1 ~ 5000	mH
		1phase	0.333 ~ 1666.667	mH
		reverse	2 ~ 10000	mH
	C Range	3phase	0.001 ~ 5	mF
		1phase	0.003 ~ 15	mF
		reverse	0.001 ~ 2.5	mF
Voltage Slew Rate, Typical	⩾2 V/μs with full-scale programmed voltage step			
Output Isolation	550Vac			
Measurement parameter				
Voltage RMS	**Resolution**		0.01	V
	Accuracy	DC,16Hz ~ 150Hz	< 0.1%+0.1% F.S.	
	Temperature coefficient		< 100ppm/C° F.S.	
Current RMS	**Resolution**		0.1	A
	Accuracy	DC,16Hz ~ 150Hz	< 0.1% + 0.2% F.S.	
	Temperature coefficient		< 200ppm/C° F.S.	
Peak current	**Resolution**		0.1	A

	Accuracy	16Hz ~ 150Hz	< 0.4% + 0.6% F.S.	
Output power	**Resolution**		0.001	kW
	Accuracy	DC,16Hz ~ 150Hz	< 0.4% +0.4% F.S.	
Harmonic measurement	**Max.**	50/60Hz	up to 50	orders
Regenerative				
Max. Regenerative power	21k			VA
ITHD	< 5%			
Others				
Efficiency	**typ** *6	91%		
Protection		OVP, OCP, OPP, OTP, FAN, ECP, Sense		
Dimension		439.50mm (W)*132.80mm (H)*777.50mm (D) (frame Dimension) 483.00mm (W)*151.30mm (H)*841.60mm(D)(include handle, cover and foot)		
Weight		42kg		
Working temperature		0C°-50C°		
Programming response time		2ms		
Remote Sense Compensation Voltage		20V		
Communication interface		Built-in USB/CAN/LAN/Digital IO interface, optional GPIB / Analog&RS232		

*1Max. Output derated to 60% when input with (200 ~ 220) ±10% Vac
*2 Under the output frequency of 50Hz/60Hz, the maximum CF is 6 without exceeding the peak current; under the condition of full current and full power, the maximum CF is 3.
*3 parallel models need to be tested in sense remote measurement mode.
*4 Test condition is: Pure resistive loads, full power conditions.
*5 The dynamic response time test condition is: DC high-speed mode, and the capacitance of the DUT to be less than 10uF
*6 Test conditions: Input 380VLL/50Hz, output three-phase, 350Vrms per phase/50Hz/full power.
All the above parameters are subject to change without prior notice from ITECH.

IT7942E-350-210

Input parameters		
AC Input	**Wiring connection**	3 phase 3wire + ground(PE)

	Line voltage	RMS	(200 ~ 220) ±10% *1 (380 ~ 480) ±10%	V
	Line current	RMS	< 93	A
	Apparent power		< 48.7	kVA
	Frequency		45 ~ 65	Hz
	Power factor	typ	0.98	
Output parameters				
AC Output	**Output voltage**	VLN	0 ~ 350	V
		VLL（3phase）	0 ~ 606	V
		VLL（reverse）	0 ~ 700	V
	Output current	RMS（1phase）	210	A
		Crest Factor *2	6	
		Peak（1phase）	630	A
		RMS (3phase/reverse)	70	A
		Peak (3phase/reverse)	210	A
	Output power	Per Phase	14k	VA
		Max. Power (reverse phase)	28k	VA
		Max. Power (1phase/3phase)	42k	VA
	Voltage setting			
	Range	1phase/3phase	0 ~ 350	V
		reverse	0 ~ 700	V
	Resolution		0.01	V
	Accuracy	16Hz ~ 150Hz	< 0.1%+0.1% F.S.	
	Temperature coefficient		< 100ppm/C° F.S.	
	DC Voltage Offset	typ	0.02	Vdc
	Current Limit setting			

	Range	RMS (1phase)	210	A
		RMS (3phase/reverse)	70	A
	Resolution		0.01	A
	Accuracy	16Hz ~ 150Hz	< 0.1%+0.2% F.S.	
	Temperature coefficient		< 200ppm/C° F.S.	
	Frequency			
	Range		16 ~ 150	Hz
	Resolution		0.01	Hz
	Accuracy		0.01%	
	waveform synthesizer	50/60Hz	up to 50	orders
	Phase			
	Range		0 ~ 360	°
	Resolution		0.01	°
DC Output	**Voltage setting**			
	Range	1phase	-499 ~ 499	Vdc
		reverse	-998 ~ 998	Vdc
	Resolution		0.01	V
	Accuracy		< 0.1%+0.1% F.S.	
	Temperature coefficient		< 100ppm/C° F.S.	
	Current setting			
	Range	reverse	-70 ~ 70	Adc
		1phase	-210 ~ 210	Adc
	Resolution		0.01	A
	Accuracy		< 0.1%+0.2% F.S.	
	Temperature coefficient		< 200ppm/C° F.S.	
	Max. power			

	Max. power (reverse phase)	Max. Power (reverse phase)	28k	W
	Total power	Max. Power (1phase)	42k	W
Voltage stability	**Line regulation**		< 0.05% F.S.	
	*3 **Load regulation**	DC,16Hz ~ 150Hz	< 0.05% + 0.05% F.S.	
	THD *4	16Hz ~ 150Hz	< 0.5%	
	Voltage ripple	RMS	< 0.5	V
	*5 **Dynamic response**	typ	200	us
Programmable impedance	**R Range**	3phase	0 ~ 500	mΩ
		1phase	0 ~ 166.667	mΩ
		reverse	0 ~ 1000	mΩ
	L Range	3phase	0 ~ 500	uH
		1phase	0 ~ 166.667	uH
		reverse	0 ~ 1000	uH
Islanding RLC	**P Range**	3phase	0 ~ 14	kW
		1phase	0 ~ 42	kW
		reverse	0 ~ 28	kW
	QL Range	3phase	0 ~ 14	kVar
		1phase	0 ~ 42	kVar
		reverse	0 ~ 28	kVar
	QC Range	3phase	0 ~ 14	kVar
		1phase	0 ~ 42	kVar
		reverse	0 ~ 28	kVar
	R Range	3phase	0.5 ~ 500	Ω
		1phase	0.167 ~ 166.667	Ω
		reverse	1 ~ 1000	Ω
	L Range	3phase	0.5 ~ 2500	mH

		1phase	0.167 ~ 833.333	mH
		reverse	1 ~ 5000	mH
	C Range	3phase	0.002 ~ 10	mF
		1phase	0.006 ~ 30	mF
		reverse	0.001 ~ 5	mF
Voltage Slew Rate, Typical	⩾2 V/μs with full-scale programmed voltage step			
Output Isolation	550Vac			
Measurement parameter				
Voltage RMS	**Resolution**		0.01	V
	Accuracy	DC,16Hz ~ 150Hz	< 0.1%+0.1% F.S.	
	Temperature coefficient		< 100ppm/C° F.S.	
Current RMS	**Resolution**		0.1	A
	Accuracy	DC,16Hz ~ 150Hz	< 0.1% + 0.2% F.S.	
	Temperature coefficient		< 200ppm/C° F.S.	
Peak current	**Resolution**		0.1	A
	Accuracy	16Hz ~ 150Hz	< 0.4% + 0.6% F.S.	
Output power	**Resolution**		0.001	kW
	Accuracy	DC,16Hz ~ 150Hz	< 0.4% +0.4% F.S.	
Harmonic measurement	**Max.**	50/60Hz	up to 50	orders
Regenerative				
Max. Regenerative power	42k			VA
ITHD	< 5%			
Others				
Efficiency	**typ** *6	91%		
Protection		OVP, OCP, OPP, OTP, FAN, ECP, Sense		
Dimension		439.50mm (W)*266.00mm (H)*777.50mm (D) (frame Dimension) 483.00mm (W)*347.2mm (H)*841.60mm(D)(include handle, cover and foot)		
Weight		99kg		
Working temperature		0C°-50C°		

Programming response time		2ms
Remote Sense Compensation Voltage		20V
Communication interface		Built-in USB/CAN/LAN/Digital IO interface, optional GPIB / Analog&RS232

*1Max. Output derated to 60% when input with (200 ~ 220) ±10% Vac
*2 Under the output frequency of 50Hz/60Hz, the maximum CF is 6 without exceeding the peak current; under the condition of full current and full power, the maximum CF is 3.
*3 parallel models need to be tested in sense remote measurement mode.
*4 Test condition is: Pure resistive loads, full power conditions.
*5 The dynamic response time test condition is: DC high-speed mode, and the capacitance of the DUT to be less than 10uF
*6 Test conditions: Input 380VLL/50Hz, output three-phase, 350Vrms per phase/50Hz/full power.
All the above parameters are subject to change without prior notice from ITECH.

IT7963E-350-315

Input parameters				
AC Input	**Wiring connection**	3 phase 3wire + ground(PE)		
	Line voltage	RMS	(200 ~ 220) ±10% *1 (380 ~ 480) ±10%	V
	Line current	RMS	< 140	A
	Apparent power		< 73.1	kVA
	Frequency		45 ~ 65	Hz
	Power factor	typ	0.98	
Output parameters				
AC Output	**Output voltage**	VLN	0 ~ 350	V
		VLL（3phase）	0 ~ 606	V
		VLL（reverse）	0 ~ 700	V
	Output current	RMS（1phase）	315	A
		Crest Factor *2	6	
		Peak（1phase）	945	A
		RMS (3phase/reverse)	105	A
		Peak (3phase/reverse)	315	A
	Output power	Per Phase	21k	VA

		Max. Power (reverse phase)	42k	VA
		Max. Power (1phase/3phase)	63k	VA
	Voltage setting			
	Range	1phase/3phase	0 ~ 350	V
		reverse	0 ~ 700	V
	Resolution		0.01	V
	Accuracy	16Hz ~ 150Hz	< 0.1%+0.1% F.S.	
	Temperature coefficient		< 100ppm/C° F.S.	
	DC Voltage Offset	typ	0.02	Vdc
	Current Limit setting			
	Range	RMS (1phase)	315	A
		RMS (3phase/reverse)	105	A
	Resolution		0.1	A
	Accuracy	16Hz ~ 150Hz	< 0.1%+0.2% F.S.	
	Temperature coefficient		< 200ppm/C° F.S.	
	Frequency			
	Range		16 ~ 150	Hz
	Resolution		0.01	Hz
	Accuracy		0.01%	
	waveform synthesizer	50/60Hz	up to 50	orders
	Phase			
	Range		0 ~ 360	°
	Resolution		0.01	°
DC Output	**Voltage setting**			
	Range	1phase	-499 ~ 499	Vdc

		reverse	-998 ~ 998	Vdc
	Resolution		0.01	V
	Accuracy		< 0.1%+0.1% F.S.	
	Temperature coefficient		< 100ppm/C° F.S.	
	Current setting			
	Range	reverse	-105 ~ 105	Adc
		1phase	-315 ~ 315	Adc
	Resolution		0.1	A
	Accuracy		< 0.1%+0.2% F.S.	
	Temperature coefficient		< 200ppm/C° F.S.	
	Max. power			
	Max. power (reverse phase)	Max. Power (reverse phase)	42k	W
	Total power	Max. Power (1phase)	63k	W
Voltage stability	**Line regulation**		< 0.05% F.S.	
	*3 **Load regulation**	DC,16Hz ~ 150Hz	< 0.05% + 0.05% F.S.	
	THD *4	16Hz ~ 150Hz	< 0.5%	
	Voltage ripple	RMS	< 0.6	V
	*5 **Dynamic response**	typ	200	us
Programmable impedance	**R Range**	3phase	0 ~ 333.333	mΩ
		1phase	0 ~ 111.111	mΩ
		reverse	0 ~ 666.667	mΩ
	L Range	3phase	0 ~ 333.333	uH
		1phase	0 ~ 111.111	uH
		reverse	0 ~ 666.667	uH
Islanding RLC	**P Range**	3phase	0 ~ 21	kW

		1phase	0 ~ 63	kW
		reverse	0 ~ 42	kW
	QL Range	3phase	0 ~ 21	kVar
		1phase	0 ~ 63	kVar
		reverse	0 ~ 42	kVar
	QC Range	3phase	0 ~ 21	kVar
		1phase	0 ~ 63	kVar
		reverse	0 ~ 42	kVar
	R Range	3phase	0.333 ~ 333.333	Ω
		1phase	0.111 ~ 111.111	Ω
		reverse	0.667 ~ 666.667	Ω
	L Range	3phase	0.333 ~ 1666.667	mH
		1phase	0.111 ~ 555.556	mH
		reverse	0.667 ~ 3333.333	mH
	C Range	3phase	0.003 ~ 15	mF
		1phase	0.009 ~ 45	mF
		reverse	0.002 ~ 7.5	mF
Voltage Slew Rate, Typical	⩾2 V/μs with full-scale programmed voltage step			
Output Isolation	550Vac			
Measurement parameter				
Voltage RMS	**Resolution**		0.01	V
	Accuracy	DC,16Hz ~ 150Hz	< 0.1%+0.1% F.S.	
	Temperature coefficient		< 100ppm/C° F.S.	
Current RMS	**Resolution**		0.1	A
	Accuracy	DC,16Hz ~ 150Hz	< 0.1% + 0.2% F.S.	
	Temperature coefficient		< 200ppm/C° F.S.	
Peak current	**Resolution**		0.1	A

	Accuracy	16Hz ~ 150Hz	< 0.4% + 0.6% F.S.	
Output power	**Resolution**		0.001	kW
	Accuracy	DC,16Hz ~ 150Hz	< 0.4% +0.4% F.S.	
Harmonic measurement	**Max.**	50/60Hz	up to 50	orders
Regenerative				
Max. Regenerative power	63k			VA
ITHD	< 5%			
Others				
Efficiency	**typ *6**	91%		
Protection		OVP, OCP, OPP, OTP, FAN, ECP, Sense		
Dimension		550.0000mm （W）*907.6（H）*841mm（D）(909mm include cover)		
Weight		203.32kg		
Working temperature		0C°-50C°		
Programming response time		2ms		
Remote Sense Compensation Voltage		20V		
Communication interface		Built-in USB/CAN/LAN/Digital IO interface, optional GPIB / Analog&RS232		

*1Max. Output derated to 60% when input with (200 ~ 220) ±10% Vac
*2 Under the output frequency of 50Hz/60Hz, the maximum CF is 6 without exceeding the peak current; under the condition of full current and full power, the maximum CF is 3.
*3 parallel models need to be tested in sense remote measurement mode.
*4 Test condition is: Pure resistive loads, full power conditions.
*5 The dynamic response time test condition is: DC high-speed mode, and the capacitance of the DUT to be less than 10uF
*6 Test conditions: Input 380VLL/50Hz, output three-phase, 350Vrms per phase/50Hz/full power.
All the above parameters are subject to change without prior notice from ITECH.

IT7984E-350-420

Input parameters				
AC Input	**Wiring connection**	3 phase 3wire + ground(PE)		
	Line voltage	RMS	(200 ~ 220) ±10% *1 (380 ~ 480) ±10%	V
	Line current	RMS	< 186	A
	Apparent power		< 97.4	kVA
	Frequency		45 ~ 65	Hz
	Power factor	typ	0.98	
Output parameters				
AC Output	**Output voltage**	VLN	0 ~ 350	V
		VLL（3phase）	0 ~ 606	V
		VLL（reverse）	0 ~ 700	V
	Output current	RMS（1phase）	420	A
		Crest Factor *2	6	
		Peak（1phase）	1260	A
		RMS (3phase/reverse)	140	A
		Peak (3phase/reverse)	420	A
	Output power	Per Phase	28k	VA
		Max. Power (reverse phase)	56k	VA
		Max. Power (1phase/3phase)	84k	VA
	Voltage setting			
	Range	1phase/3phase	0 ~ 350	V
		reverse	0 ~ 700	V
	Resolution		0.01	V
	Accuracy	16Hz ~ 150Hz	< 0.1%+0.1% F.S.	

	Temperature coefficient		< 100ppm/C° F.S.	
	DC Voltage Offset	typ	0.02	Vdc
	Current Limit setting			
	Range	RMS (1phase)	420	A
		RMS (3phase/reverse)	140	A
	Resolution		0.1	A
	Accuracy	16Hz ~ 150Hz	< 0.1%+0.2% F.S.	
	Temperature coefficient		< 200ppm/C° F.S.	
	Frequency			
	Range		16 ~ 150	Hz
	Resolution		0.01	Hz
	Accuracy		0.01%	
	waveform synthesizer	50/60Hz	up to 50	orders
	Phase			
	Range		0 ~ 360	°
	Resolution		0.01	°
DC Output	**Voltage setting**			
	Range	1phase	-499 ~ 499	Vdc
		reverse	-998 ~ 998	Vdc
	Resolution		0.01	V
	Accuracy		< 0.1%+0.1% F.S.	
	Temperature coefficient		< 100ppm/C° F.S.	
	Current setting			
	Range	reverse	-140 ~ 140	Adc
		1phase	-420 ~ 420	Adc
	Resolution		0.1	A

	Accuracy		< 0.1%+0.2% F.S.	
	Temperature coefficient		< 200ppm/C° F.S.	
	Max. power			
	Max. power (reverse phase)	Max. Power (reverse phase)	56k	W
	Total power	Max. Power (1phase)	84k	W
Voltage stability	**Line regulation**		< 0.05% F.S.	
	*3 **Load regulation**	DC,16Hz ~ 150Hz	< 0.05% + 0.05% F.S.	
	THD *4	16Hz ~ 150Hz	< 0.5%	
	Voltage ripple	RMS	< 0.7	V
	*5 **Dynamic response**	typ	1000	us
Programmable impedance	**R Range**	3phase	0 ~ 250	mΩ
		1phase	0 ~ 83.333	mΩ
		reverse	0 ~ 500	mΩ
	L Range	3phase	0 ~ 250	uH
		1phase	0 ~ 83.333	uH
		reverse	0 ~ 500	uH
Islanding RLC	**P Range**	3phase	0 ~ 28	kW
		1phase	0 ~ 84	kW
		reverse	0 ~ 56	kW
	QL Range	3phase	0 ~ 28	kVar
		1phase	0 ~ 84	kVar
		reverse	0 ~ 56	kVar
	QC Range	3phase	0 ~ 28	kVar
		1phase	0 ~ 84	kVar
		reverse	0 ~ 56	kVar
	R Range	3phase	0.25 ~ 250	Ω

		1phase	0.083 ~ 83.333	Ω
		reverse	0.5 ~ 500	Ω
	L Range	3phase	0.25 ~ 1250	mH
		1phase	0.083 ~ 416.667	mH
		reverse	0.5 ~ 2500	mH
	C Range	3phase	0.004 ~ 20	mF
		1phase	0.012 ~ 60	mF
		reverse	0.002 ~ 10	mF
Voltage Slew Rate, Typical	⩾2 V/μs with full-scale programmed voltage step			
Output Isolation	550Vac			
Measurement parameter				
Voltage RMS	**Resolution**		0.01	V
	Accuracy	DC,16Hz ~ 150Hz	< 0.1%+0.1% F.S.	
	Temperature coefficient		< 100ppm/C° F.S.	
Current RMS	**Resolution**		0.1	A
	Accuracy	DC,16Hz ~ 150Hz	< 0.1% + 0.2% F.S.	
	Temperature coefficient		< 200ppm/C° F.S.	
Peak current	**Resolution**		1	A
	Accuracy	16Hz ~ 150Hz	< 0.4% + 0.6% F.S.	
Output power	**Resolution**		0.001	kW
	Accuracy	DC,16Hz ~ 150Hz	< 0.4% +0.4% F.S.	
Harmonic measurement	**Max.**	50/60Hz	up to 50	orders
Regenerative				
Max. Regenerative power	84k			VA
ITHD	< 5%			
Others				

Efficiency	typ *6	91%
Protection		OVP, OCP, OPP, OTP, FAN, ECP, Sense
Dimension		600.0000mm （W）*1475（H）*841mm（D） （909mm include cover)
Weight		299.82kg
Working temperature		0C°-50C°
Programming response time		2ms
Remote Sense Compensation Voltage		20V
Communication interface		Built-in USB/CAN/LAN/Digital IO interface, optional GPIB / Analog&RS232

*1Max. Output derated to 60% when input with (200 ~ 220) ±10% Vac
*2 Under the output frequency of 50Hz/60Hz, the maximum CF is 6 without exceeding the peak current; under the condition of full current and full power, the maximum CF is 3.
*3 parallel models need to be tested in sense remote measurement mode.
*4 Test condition is: Pure resistive loads, full power conditions.
*5 The dynamic response time test condition is: DC high-speed mode, and the capacitance of the DUT to be less than 10uF
*6 Test conditions: Input 380VLL/50Hz, output three-phase, 350Vrms per phase/50Hz/full power.
All the above parameters are subject to change without prior notice from ITECH.

IT79105E-350-525

Input parameters				
AC Input	**Wiring connection**	3 phase 3wire + ground(PE)		
	Line voltage	RMS	(200 ~ 220) ±10% *1 (380 ~ 480) ±10%	V
	Line current	RMS	< 233	A
	Apparent power		< 121.8	kVA
	Frequency		45 ~ 65	Hz
	Power factor	typ	0.98	
Output parameters				
AC Output	**Output voltage**	VLN	0 ~ 350	V
		VLL（3phase）	0 ~ 606	V
		VLL（reverse）	0 ~ 700	V
	Output current	RMS（1phase）	525	A

		Crest Factor *2	6	
		Peak（1phase）	1575	A
		RMS (3phase/reverse)	175	A
		Peak (3phase/reverse)	525	A
	Output power	Per Phase	35k	VA
		Max. Power (reverse phase)	70k	VA
		Max. Power (1phase/3phase)	105k	VA
	Voltage setting			
	Range	1phase/3phase	0 ~ 350	V
		reverse	0 ~ 700	V
	Resolution		0.01	V
	Accuracy	16Hz ~ 150Hz	< 0.1%+0.1% F.S.	
	Temperature coefficient		< 100ppm/C° F.S.	
	DC Voltage Offset	typ	0.02	Vdc
	Current Limit setting			
	Range	RMS (1phase)	525	A
		RMS (3phase/reverse)	175	A
	Resolution		0.1	A
	Accuracy	16Hz ~ 150Hz	< 0.1%+0.2% F.S.	
	Temperature coefficient		< 200ppm/C° F.S.	
	Frequency			
	Range		16 ~ 150	Hz
	Resolution		0.01	Hz
	Accuracy		0.01%	

	waveform synthesizer	50/60Hz	up to 50	orders
	Phase			
	Range		0 ~ 360	°
	Resolution		0.01	°
DC Output	**Voltage setting**			
	Range	1phase	-499 ~ 499	Vdc
		reverse	-998 ~ 998	Vdc
	Resolution		0.01	V
	Accuracy		< 0.1%+0.1% F.S.	
	Temperature coefficient		< 100ppm/C° F.S.	
	Current setting			
	Range	reverse	-175 ~ 175	Adc
		1phase	-525 ~ 525	Adc
	Resolution		0.1	A
	Accuracy		< 0.1%+0.2% F.S.	
	Temperature coefficient		< 200ppm/C° F.S.	
	Max. power			
	Max. power (reverse phase)	Max. Power (reverse phase)	70k	W
	Total power	Max. Power (1phase)	105k	W
Voltage stability	**Line regulation**		< 0.05% F.S.	
	*3 **Load regulation**	DC,16Hz ~ 150Hz	< 0.05% + 0.05% F.S.	
	THD *4	16Hz ~ 150Hz	< 0.5%	
	Voltage ripple	RMS	< 0.8	V
	*5 **Dynamic response**	typ	1000	us
	R Range	3phase	0 ~ 200	mΩ

Programmable impedance		1phase	0 ~ 66.667	mΩ
		reverse	0 ~ 400	mΩ
	L Range	3phase	0 ~ 200	uH
		1phase	0 ~ 66.667	uH
		reverse	0 ~ 400	uH
Islanding RLC	**P Range**	3phase	0 ~ 35	kW
		1phase	0 ~ 105	kW
		reverse	0 ~ 70	kW
	QL Range	3phase	0 ~ 35	kVar
		1phase	0 ~ 105	kVar
		reverse	0 ~ 70	kVar
	QC Range	3phase	0 ~ 35	kVar
		1phase	0 ~ 105	kVar
		reverse	0 ~ 70	kVar
	R Range	3phase	0.2 ~ 200	Ω
		1phase	0.067 ~ 66.667	Ω
		reverse	0.4 ~ 400	Ω
	L Range	3phase	0.2 ~ 1000	mH
		1phase	0.067 ~ 333.333	mH
		reverse	0.4 ~ 2000	mH
	C Range	3phase	0.005 ~ 25	mF
		1phase	0.015 ~ 75	mF
		reverse	0.003 ~ 12.5	mF
Voltage Slew Rate, Typical	⩾2 V/μs with full-scale programmed voltage step			
Output Isolation	550Vac			
Measurement parameter				
Voltage RMS	**Resolution**		0.01	V

	Accuracy	DC,16Hz ~ 150Hz	< 0.1%+0.1% F.S.	
	Temperature coefficient		< 100ppm/C° F.S.	
Current RMS	**Resolution**		0.1	A
	Accuracy	DC,16Hz ~ 150Hz	< 0.1% + 0.2% F.S.	
	Temperature coefficient		< 200ppm/C° F.S.	
Peak current	**Resolution**		1	A
	Accuracy	16Hz ~ 150Hz	< 0.4% + 0.6% F.S.	
Output power	**Resolution**		0.1	kW
	Accuracy	DC,16Hz ~ 150Hz	< 0.4% +0.4% F.S.	
Harmonic measurement	**Max.**	50/60Hz	up to 50	orders
Regenerative				
Max. Regenerative power	105k			VA
ITHD	< 5%			
Others				
Efficiency	**typ** *6	91%		
Protection		OVP, OCP, OPP, OTP, FAN, ECP, Sense		
Dimension		600.0000mm （W）*1475（H）*841mm（D）(909mm include cover)		
Weight		344.12kg		
Working temperature		0C°-50C°		
Programming response time		2ms		
Remote Sense Compensation Voltage		20V		
Communication interface		Built-in USB/CAN/LAN/Digital IO interface, optional GPIB / Analog&RS232		

*1Max. Output derated to 60% when input with (200 ~ 220) ±10% Vac
*2 Under the output frequency of 50Hz/60Hz, the maximum CF is 6 without exceeding the peak current; under the condition of full current and full power, the maximum CF is 3.

*3 parallel models need to be tested in sense remote measurement mode.
*4 Test condition is: Pure resistive loads, full power conditions.
*5 The dynamic response time test condition is: DC high-speed mode, and the capacitance of the DUT to be less than 10uF
*6 Test conditions: Input 380VLL/50Hz, output three-phase, 350Vrms per phase/50Hz/full power.
All the above parameters are subject to change without prior notice from ITECH.

IT79126E-350-630

Input parameters				
AC Input	**Wiring connection**	3 phase 3wire + ground(PE)		
	Line voltage	RMS	(200 ~ 220) ±10% *1 (380 ~ 480) ±10%	V
	Line current	RMS	< 279	A
	Apparent power		< 146.1	kVA
	Frequency		45 ~ 65	Hz
	Power factor	typ	0.98	
Output parameters				
AC Output	**Output voltage**	VLN	0 ~ 350	V
		VLL（3phase）	0 ~ 606	V
		VLL（reverse）	0 ~ 700	V
	Output current	RMS（1phase）	630	A
		Crest Factor *2	6	
		Peak（1phase）	1890	A
		RMS (3phase/reverse)	210	A
		Peak (3phase/reverse)	630	A
	Output power	Per Phase	42k	VA
		Max. Power (reverse phase)	84k	VA
		Max. Power (1phase/3phase)	126k	VA
	Voltage setting			

	Range	1phase/3phase	0 ~ 350	V
		reverse	0 ~ 700	V
	Resolution		0.01	V
	Accuracy	16Hz ~ 150Hz	< 0.1%+0.1% F.S.	
	Temperature coefficient		< 100ppm/C° F.S.	
	DC Voltage Offset	typ	0.02	Vdc
	Current Limit setting			
	Range	RMS (1phase)	630	A
		RMS (3phase/reverse)	210	A
	Resolution		0.1	A
	Accuracy	16Hz ~ 150Hz	< 0.1%+0.2% F.S.	
	Temperature coefficient		< 200ppm/C° F.S.	
	Frequency			
	Range		16 ~ 150	Hz
	Resolution		0.01	Hz
	Accuracy		0.01%	
	waveform synthesizer	50/60Hz	up to 50	orders
	Phase			
	Range		0 ~ 360	°
	Resolution		0.01	°
DC Output	**Voltage setting**			
	Range	1phase	-499 ~ 499	Vdc
		reverse	-998 ~ 998	Vdc
	Resolution		0.01	V
	Accuracy		< 0.1%+0.1% F.S.	
	Temperature coefficient		< 100ppm/C° F.S.	

	Current setting			
	Range	reverse	-210 ~ 210	Adc
		1phase	-630 ~ 630	Adc
	Resolution		0.1	A
	Accuracy		< 0.1%+0.2% F.S.	
	Temperature coefficient		< 200ppm/C° F.S.	
	Max. power			
	Max. power (reverse phase)	Max. Power (reverse phase)	84k	W
	Total power	Max. Power (1phase)	126k	W
Voltage stability	**Line regulation**		< 0.05% F.S.	
	*3 **Load regulation**	DC,16Hz ~ 150Hz	< 0.05% + 0.05% F.S.	
	THD *4	16Hz ~ 150Hz	< 0.5%	
	Voltage ripple	RMS	< 0.9	V
	*5 **Dynamic response**	typ	1000	us
Programmable impedance	**R Range**	3phase	0 ~ 166.667	mΩ
		1phase	0 ~ 55.556	mΩ
		reverse	0 ~ 333.333	mΩ
	L Range	3phase	0 ~ 166.667	uH
		1phase	0 ~ 55.556	uH
		reverse	0 ~ 333.333	uH
Islanding RLC	**P Range**	3phase	0 ~ 42	kW
		1phase	0 ~ 126	kW
		reverse	0 ~ 84	kW
	QL Range	3phase	0 ~ 42	kVar
		1phase	0 ~ 126	kVar
		reverse	0 ~ 84	kVar

	QC Range	3phase	0 ~ 42	kVar
		1phase	0 ~ 126	kVar
		reverse	0 ~ 84	kVar
	R Range	3phase	0.167 ~ 166.667	Ω
		1phase	0.056 ~ 55.556	Ω
		reverse	0.333 ~ 333.333	Ω
	L Range	3phase	0.167 ~ 833.333	mH
		1phase	0.056 ~ 277.778	mH
		reverse	0.333 ~ 1666.667	mH
	C Range	3phase	0.006 ~ 30	mF
		1phase	0.018 ~ 90	mF
		reverse	0.003 ~ 15	mF
Voltage Slew Rate, Typical	⩾2 V/μs with full-scale programmed voltage step			
Output Isolation	550Vac			
Measurement parameter				
Voltage RMS	**Resolution**		0.01	V
	Accuracy	DC,16Hz ~ 150Hz	< 0.1%+0.1% F.S.	
	Temperature coefficient		< 100ppm/C° F.S.	
Current RMS	**Resolution**		0.1	A
	Accuracy	DC,16Hz ~ 150Hz	< 0.1% + 0.2% F.S.	
	Temperature coefficient		< 200ppm/C° F.S.	
Peak current	**Resolution**		1	A
	Accuracy	16Hz ~ 150Hz	< 0.4% + 0.6% F.S.	
Output power	**Resolution**		0.1	kW
	Accuracy	DC,16Hz ~ 150Hz	< 0.4% +0.4% F.S.	
Harmonic measurement	**Max.**	50/60Hz	up to 50	orders

Regenerative		
Max. Regenerative power	126k	VA
ITHD	< 5%	

Others		
Efficiency	**typ** *6	91%
Protection		OVP, OCP, OPP, OTP, FAN, ECP, Sense
Dimension		600.0000mm (W) *1475 (H) *841mm (D) (909mm include cover)
Weight		389.42kg
Working temperature		0C°-50C°
Programming response time		2ms
Remote Sense Compensation Voltage		20V
Communication interface		Built-in USB/CAN/LAN/Digital IO interface, optional GPIB / Analog&RS232

*1Max. Output derated to 60% when input with (200 ~ 220) ±10% Vac
*2 Under the output frequency of 50Hz/60Hz, the maximum CF is 6 without exceeding the peak current; under the condition of full current and full power, the maximum CF is 3.
*3 parallel models need to be tested in sense remote measurement mode.
*4 Test condition is: Pure resistive loads, full power conditions.
*5 The dynamic response time test condition is: DC high-speed mode, and the capacitance of the DUT to be less than 10uF
*6 Test conditions: Input 380VLL/50Hz, output three-phase, 350Vrms per phase/50Hz/full power.
All the above parameters are subject to change without prior notice from ITECH.

Chapter11 Remote Control

This series power supply comes standard with four communication interfaces: USB, LAN and CAN, and supports two optional communication interfaces: GPIB, RS-232. You can choose one of them to communicate with your computer.

Note

When you use the remote interface to send SCPI instructions, if you use the programming commands that involve modifying the instrument settings, such as modifying the output voltage value, after completing the communication connection between the instrument and the host computer, and after the communication settings are completed, you must execute the **SYST:REM** command firstly.

11.1 USB Interface

Use cables with both USB ends to connect with IT7900 and PC. All functions are programmable over the USB.

The USB488 interface capabilities are described below:

- The interface is 488.2 USB488 interface.
- The interface accepts REN_CONTROL, GO_TO_LOCAL, and LOCAL_LOCKOUT requests.
- The interface accepts MsgID = TRIGGER USBTMC command message and forwards TRIGGER requests to the function layer.

The USB488 device functions are described below:

- The device understands all mandatory SCPI commands.
- The device is SR1 capable.
- The device is RL1 capable.

The device is DT1 capable.

The operation steps to change the USB interface type in System Menu are as follows.

1. Press the composite keys **[Shift]+** (System) on the front panel to en- ter the system menu.
2. Select Communication **->USB** and press **[Enter]**.
3. Select **USB Type** to Device, and press **[Enter]**.
4. Select the USB device class to TMC or VCP.

11.2 LAN Interface

When the user connect PC through LAN interface, the following is required to use the LAN interface. The LAN interface complies with the LXI standard.

Connect Interface

Use the following steps to quickly connect your instrument to your LAN and con- figure it. Two typical LAN interface systems are described below: private LAN and site LAN.

- Connect to the private LAN

  A private LAN is a network in which LAN-enabled instruments and computers are directly connected. They are typically small, with no centrally-managed resources. When connected to a computer, a standard network cable can be used to connect directly to the computer via the LAN interface.

- Connect to the site LAN

  A site LAN is a local area network in which LAN-enabled instruments and computers are connected to the network through routers, hubs, and/or switches. They are typically large, centrally-managed networks with services such as DHCP and DNS servers. When connected to a computer, a network cable can be used to connect to the router, and the computer is also con- nected to the router.

Note

- When using one crossover cable to connect PC directly, the gateway address of the instrument should be consistent with that of the PC, and the IP address should be at the same network segment with the PC's IP address.
- When the instrument and computer are connected to the router, an independent IP address must be assigned for the instrument.

Configure LAN Interface Information

The configurable parameters of the IT7900 series power supply are described as follows.

LAN Config：

- Mode: IP Address seting method, user can selectautomatically configure the address of the instrument(DHCP) or manually.
- IP: This value is the Internet Protocol (IP) address of the instrument. An IP address is required for all IP and TCP/IP communications with the instrument. An IP Address consists of 4 decimal numbers separated by periods. Each decimal number ranges from 0 through 255 with no leading zeros (for example, 169.254.2.20).
- Mask: This value is used to enable the instrument to determine if a client IP address is on the same local subnet. The same numbering notation applies as for the IP Address. When a client IP address is on a different subnet, all packets must be sent to the Default Gateway.
- Gateway: This value is the IP Address of the default gateway that allows the instrument to communicate with systems that are not on the local subnet, as determined by the subnet mask setting. The same numbering notation applies as for the IP Address. A value of 0.0.0.0 indicates that no default gate-

way is defined.

- Socket Port: This value indicates the port number corresponding to the service.

How to Configure

Take manual configuration as an example. The steps are as follows:

1. Press the composite keys [Shift]+ （System） on the front panel to enter the system menu.
2. Select **Communication** and press [Enter].
3. Press the Left/Right key to select **LAN** and set the mode to **Manual**.
4. Set the **IP**, **Mask** and the other parameters in turns, and press **[Enter]**.

Using Web Server

The instrument has a built-in Web server for monitoring and controlling the instrument via a Web browser in PC. To use the Web server, connect the instrument and PC over LAN interface and enter the instrument's IP address into the address bar at the top of your PC's Web browser, you can access the front panel control functions including the LAN configuration parameters.

The format of the address entered in the address bar of the browser is **http://*192.168.200.100***. The specific IP address is subject to the actual instrument settings. The password is **iTech** by default.

The opened page is displayed as follows:

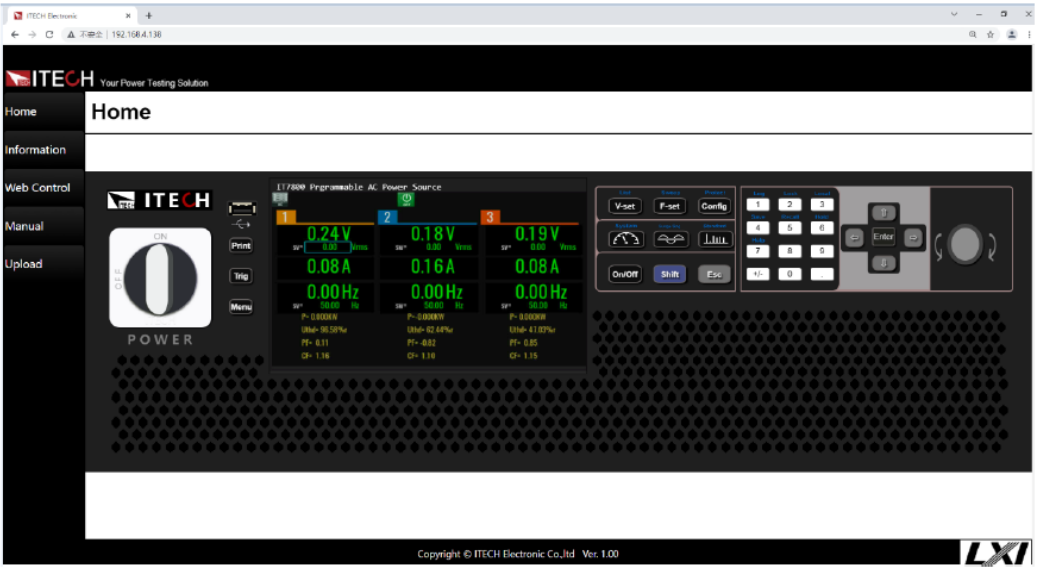

You can select different pages by clicking the buttons shown in the navigation bar on the left side of the window. The detailed descriptions are as follows.

- Home: Web home interface, displays the model and appearance of the instrument;
- Information: Displays the serial number of the instrument and more system information as well as LAN configuration parameters;
- Web Control: Enables the Web control to begin controlling the instrument.

This page allows you to monitor and control the instrument;

- LAN Configuration: Reconfigure the LAN parameters;
- Manual: Go to the ITECH official website and view or download the relevant documents.
- Upload: Performs a system upgrade.

  Click **CONNECT** to connect the PC with the instrument, then click **Select File** to select the system upgrade installation package (for example, IT7900P-U-V000.001.029all.itech), and then click **UPLOAD** performs the upgrade operation. After the upgrade is complete, the instrument needs to be restarted.

11.3 CAN Interface

The CAN interface is located on the rear panel of the instrument and is connected to the computer using a CAN communication cable.

Definition of CAN Pins

The definition of CAN pins are as follows.

Pins	Description
H	CAN_H
L	CAN_L

CAN Configuration

The user needs to configure the CAN interface parameters in the system menu before using the remote control. The CAN interface parameters are as follows.

Name	Description
Address	Range: 0 – 127
Baud rate	Select the baud rate from the following options: 5k/10k/20k/40k/50k/80k/100k/125k/200k/250k/400k /500k/600k/800k/1000k

The operation steps are as follows.

1. Press the composite keys [Shift]+ （System） on the front panel to en- ter the system menu.
2. Select **Communication** and press **[Enter]**.
3. Select **CAN** and press **[Enter]**.
4. Set the baud rate and address, press **[Enter]**.

CAN Troubleshooting

If you meet some problems when communicating with PC by CAN interface,

please check the following items:

- PC and the instrument must have the same baud rate.
- Ensure you have used the correct communication cable (CAN_H, CAN_L). Please pay attention that some cable may not have a correct internal wiring even it is with an appropriate plug.
- The interface cable is correctly connected (CAN_H to CAN_H, CAN_L to CAN_L).
- If the communication signal is poor or unstable, it is recommended to con- nect a 120 Ω terminating resistance.
  - The connection diagram of a single device is as below.

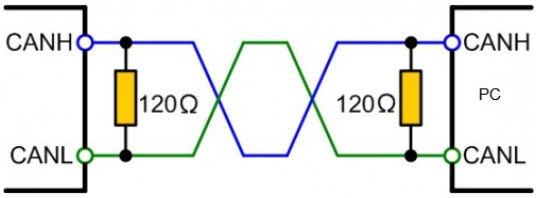

  - The connection diagram of multiple devices is as below.

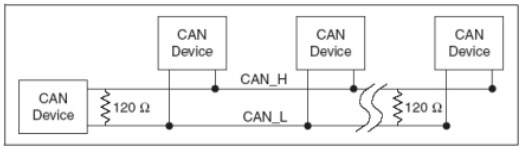

Note

When multiple devices are connected, it is recommended to connect the pin 8 (GND) of the P-IO terminal on the rear panel of these devi- ces in parallel, and the communication quality will be improved in the entire CAN network.

11.4 GPIB Interface (Optional)

The GPIB (IEEE-488) interface is assembled in the IT-E176 communication board. Use a GPIB cable to connect GPIB interfaces of the instrument and PC. Please ensure that the screws have been screwed down in order to have a full connection.

GPIB Configuration

Each device on the GPIB (IEEE-488) interface must have a unique whole num- ber address between 1 and 30. Your computer's GPIB interface card address must not conflict with any instrument on the interface bus. This setting is nonvo- latile; it will not be changed by *RST.

When you purchase the interface accessory and successfully insert it into the corresponding position on the rear panel of the instrument, the menu item for changing the GPIB address appears in the System menu. The specific steps are as follows:

1. Ensure that the instrument's power switch is off, that is, the instrument is in Power Off state.
2. Insert the separately purchased GPIB interface card into the card slot on the rear panel of the instrument.
3. Connect the instrument with the computer via the GPIB cable. After the connection is successful, turn on the power switch of the instrument.
4. Press the composite keys [Shift]+ (System) on the front panel to en- ter the system menu.
5. Select **Communication** and press **[Enter]**.
6. Select **GPIB** and press **[Enter]**.
7. Press the numeric keys to set the GPIB address and press **[Enter]**.

11.5 RS–232 Interface (Optional)

The RS-232 interface shares the same communication card (IT-E177) with the analog function.

Definition of RS-232 Pins

The definition of RS-232 pins are as follows.

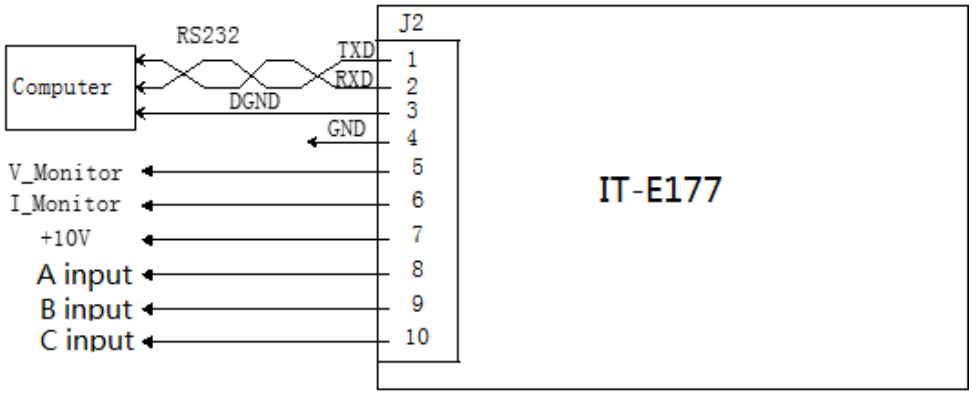

When using the RS-232 interface for communication, connect the pin 1, pin 2, and pin 3 of the IT-E177 to the PC. The pin description is as follows:

Pins	Description
1	TXD, transmit data
2	RXD, receive data
3	DGND, ground

RS–232 Configuration

When you purchase the interface accessory and successfully insert it into the corresponding position on the rear panel of the instrument, the RS–232 menu

item will appear in the System menu. The specific steps are as follows:

1. Ensure that the instrument's power switch is off, that is, the instrument is in Power Off state.
2. Insert the separately purchased RS–232 interface card into the card slot on the rear panel of the instrument.
3. Connect the instrument to the computer via an RS–232 cable. After the connection is successful, turn on the power switch of the instrument.
4. Press the composite keys [Shift]+ (System) on the front panel to en- ter the system menu.
5. Select **Communication** and press **[Enter]**.
6. Select **RS232** and press **[Enter]**.
7. Set the relevant communication parameters in turn, and press **[Enter]**.

RS-232 Troubleshooting

If you meet some problems when communicating with PC by RS-232 interface, please check the following items:

- Check that whether the baud rate of the computer and instrument are the same;
- Make sure the correct cable and adapter are connected. Note that internal wiring may not be correct even if the cable has a suitable plug;
- The cable must be connected to the correct serial ports (COM1, COM2, etc) of PC.

11.6 Commonly Used Commands Overview

The IT7900E series power supply can be connected with the remote control device through the communication interface to realize the remote operation instrument by sending SCPI commands. This series of power supplies provides a detailed commands reference IT7900E Programming Guide.

Listed below are common commands for users to quickly implement common operations. For more command information, refer to the corresponding commands reference.

```
SYSTem:REMote          // set the instrument to the remote control mode
*IDN?                  //Query identification of instrument
SYSTem:FUNCtion ONE    //Set the power mode to 1-phase mode
FUNCtion AC            //Set the output mode to AC mode
VOLTage 220            //Set the voltage RMS to 220V
FREQuency 60.0         //Set the frequency to 60Hz
CURRent:PROTection:RMS 90    //Set the current RMS protect value to
```

90A

`CURRent:PROTection:PEAK 270` //Set the current Peak protect value to 270A

`OUTPut ON` //Turn on/off the output

`MEASure:VOLTage?` //Measure the output Vrms

`MEASure:CURRent?` // Measure the output Irms

`MEASure:POWer?` // Measure the output power

`SYSTem:ERRor?` //Query the error information of the instrument

`SYSTem:CLEar` // To clear the error queue

`OUTPut:PROTection:CLEar` //To clear the protection status

11.7 Demo Software Introduction

IT7900E series AC/DC power supply provides the following computer control software, convenient for users to achieve different test control.The standard version of the software can be downloaded from the official website.

IT7900E series power supply supporting remote control software, users can directly obtain the software from ITECH agent and install to the PC, to achieve remote control equipment by visualization method, PV7900 software can achieve all the instrument panel operation. And the interface is simple and convenient to operate. For detailed introduction, please refer to PV7900 Software Manual.

Appendix

Specifications of Red and Black Test Lines

ITECH provides you with optional red and black test lines, the user can choose the company's test line for testing. For specifications of ITECH test lines and maximum current values, refer to the table below.

Model	Specifications	Length	Description
IT-E30110-AB	10A	1m	Alligator clips-Banana plugs A pair of red and black test line
IT-E30110-BB	10A	1m	Banana plugs - Banana plugs A pair of red and black test line
IT-E30110-BY	10A	1m	Banana plugs - Y-type terminals A pair of red and black test line
IT-E30312-YY	30A	1.2m	Y-type terminals - A pair of red and black test line
IT-E30320-YY	30A	2m	Y-type terminals - A pair of red and black test line
IT-E30615-OO	60A	1.5m	Ring terminals - A pair of red and black test line
IT-E31220-OO	120A	2m	Ring terminals - A pair of red and black test line
IT-E32410-OO	240A	1m	Ring terminals - A pair of red and black test line
IT-E32420-OO	240A	2m	Ring terminals - A pair of red and black test line
IT-E33620-OO	360A	2m	Ring terminals - A pair of red and black test line

For maximum current of AWG copper wire, refer to table blow.

AWG	10	12	14	16	18	20	22	24	26	28
The Maximum current value(A)	40	25	20	13	10	7	5	3.5	2.5	1.7

Note: AWG (American Wire Gage), it means X wire (marked on the wire). The table above lists current capacity of single wire at working temperature of 30°C. For reference only.

Connect with us

Thank you for purchasing ITECH products. Any questions, pls. feel free to let us know.

chat

You can chat with us on ITECH website

For more information, pls. visit www.itechate.com

ITECH Web

ITECH News
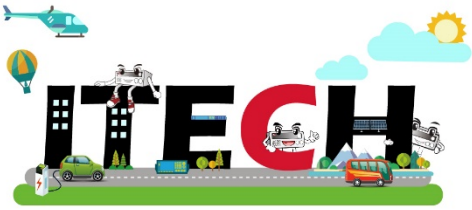
Click and follow ITECH Electronics