Programmable HV Power Supply

Series IT6700 User's Manual

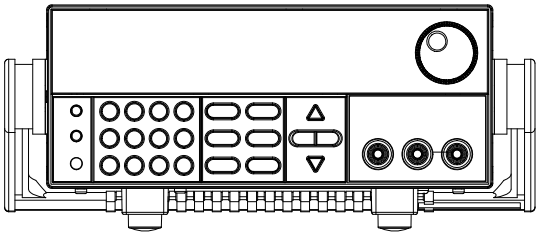

Model: IT6722/IT6722A/IT6723/IT6723B/
IT6723C/IT6723G/IT6723H/IT6724/
IT6724B/IT6724C/IT6724G/IT6724H/
IT6726C/IT6726V

Version: V3.3

Statement

© Itech Electronic, Co., Ltd. 2026
No part of this manual may be reproduced in any form or by any means (including electronic storage and retrieval or translation into a foreign language) without prior permission and written consent from Itech Electronic, Co., Ltd. as governed by international copyright laws.

Manual Article No.

IT6700

Revision

Revision 3, published on

March.18, 2026

Itech Electronic, Co., Ltd.

Trademark Statement

Pentium is a registered trademark of Intel Corporation in the United States.

Microsoft, Visual Studio, Windows and MS Windows are trademarks of Microsoft Corporation in the United States and/or other countries/regions.

Guarantee

Materials in the document are provided *talis qualis* and may be changed in future revisions without prior notice. In addition, within the maximum allowable extent of laws, ITECH is not committed to any explicit or implied guarantee for this manual and all information therein, including but not limited to the implied guarantee on marketability and availability for some special purposes. ITECH shall not be responsible for any error or incidental or indirect losses caused by the provision, use or application of this documents and information therein. If some guarantee clauses in other written agreements between ITECH and users are not consistent with clauses herein, those clauses in other written agreements shall prevail.

Technology license

Hardware and/or software in this document cannot be provided without a license and can only be used or copied according to the license.

Restricted permission statement

Restricted permissions of the U.S. government. Permissions for software and technical data which are authorized to the U.S. Government only include those for custom provision to end users. ITECH follows FAR 12.211 (technical data), 12.212 (computer software). DFARS 252.227-7015 (technical data--commercial products) for national defense and DFARS 227.7202-3 (permissions for commercial computer software or computer software documents) while providing the customized business licenses of software and technical data.

Safety Statement

CAUTION

“Caution” signs indicate danger. It is required to pay attention to the contents of these signs during implementation of operations.
The damage to the product or loss of important data may be caused in case of improper operation steps or failure to follow operation steps. Do not continue to implement any improper operation indicated in “Caution” signs when the specified conditions are not fully understood or these conditions are not satisfied.

WARNING

“Warning” indicates danger. It is required to pay attention to the contents of these signs during implementation of operation steps. Personal casualties may be caused in case of improper operation steps or failure to follow these operation steps. Do not continue to implement any improper operation indicated in “Warning” signs when the specified conditions are not fully understood or these conditions are not satisfied.

NOTE

“Instructions” indicates operation instructions. It is required to refer to the contents of these signs during operation steps. These signs are used for providing tips or supplementary information for operators.

Certification and Quality Assurance

IT6700 series power supply completely reaches nominal technical indicators in the manual.

Warranty

ITECH warrants that the product will be free from defects in material and workmanship under normal use for a period of one (1) year from the date of delivery (except those described in the Limitation of Warranty below).

For warranty service or repair, the product must be returned to a service center designated by ITECH.

- The product returned to ITECH for warranty service must be shipped PREPAID. And ITECH will pay for return of the product to customer.
- If the product is returned to ITECH for warranty service from overseas, all the freights, duties and other taxes shall be on the account of customer.

Limitation of Warranty

- Warranty service does not apply to the damage caused in the following circumstances:
- Damage resulting from customer-wired circuits or customer-supplied parts or accessories;
- Product which has been modified or repaired by the customer;
- Damage caused by the circuit installed by the customer or damage caused by operation of the product in non-specified environment;
- The product model or serial number is altered, deleted, removed or made illegible by customer;
- Damage caused by accidents, including but not limited to lightning, water, fire, abuse or negligence.

Safety signs

⎓	Direct current	I	ON (power)
∼	Alternating current	O	OFF (power)
≂	Both direct and alternating current	⏠	Power-on state
⏚	Protective earth (ground) terminal	⏡	Power-off state
⏚	Earth (ground) terminal	⏚	Reference terminal
⚠	Caution	+	Positive terminal
⚠	Warning (refer to this manual for specific Warning or Caution information)	—	Negative terminal
⏚	A chassis terminal	-	-

Copyright © Itech Electronic Co., Ltd.

Safety Precautions

General safety precautions below must be followed in each phase of instrument operation. In case of failure to follow these precautions or specific warnings in other parts of the manual, violation against the safety standards related to the design, manufacture and purpose of the instrument will occur. If the user does not follow these precautions, ITECH will bear no responsibility arising there from.

WARNING

- The power supply is provided with a three-core power cord during delivery and should be connected to a three-core junction box. Before operation, be sure that the power supply is well grounded.
- Use electric wires of appropriate load. All loading wires should be capable of bearing maximum short-circuit of electronic load without overheating.
- Ensure the voltage fluctuation of mains supply is less than 10% of the working voltage range in order to reduce risks of fire and electric shock.
- To prevent burnout, please pay special attention to positive and negative polarities of power supply during connection!
- Do not use damaged equipment. Please check the housing before using the equipment. Check whether the instrument is subject to cracking or is lack of plastic. Do not operate the instrument in the environment with explosive gas, steam or dust.
- Observe all tags on the equipment before connection.
- Do not install alternative parts on the instrument or perform any unauthorized modification.
- Do not use the equipment when the removable cover is dismantled or loose.
- Please use the power adapter supplied by the manufacturer to avoid accidental injury.
- Do not use the equipment on the life support system or other equipment with safety requirements.

WARNING

- SHOCK HAZARD Ground the Instrument. This product is provided with a protective earth terminal. To minimize shock hazard, the instrument must be connected to the AC mains through a grounded power cable, with the ground wire firmly connected to an electrical ground (safety ground) at the power outlet or distribution box. Any interruption of the protective (grounding) conductor or disconnection of the protective earth terminal will cause a potential shock hazard that could result in injury or death.
- Before applying power, verify that all safety precautions are taken. All connections must be made with the instrument turned off, and must be performed by qualified personnel who are aware of the hazards involved. Improper actions can cause fatal injury as well as equipment damage.
- SHOCK HAZARD, LETHAL VOLTAGES This product can output the dangerous voltage that can cause personal injury, and the operator must always be protected from electric shock. Ensure that the output electrodes are either insulated or covered using the safety covers provided, so that no accidental contact with lethal voltages can occur.
- Never touch cables or connections immediately after turning off the instrument. Verify that there is no dangerous voltage on the electrodes or sense terminals before touching them.

Copyright © Itech Electronic Co., Ltd.

CAUTION

- If the equipment is not used in the manner specified by the manufacturer, its protection may be damaged.
- Always use dry cloth to clean the equipment housing. Do not clean the inside of the instrument.
- Do not block the air vent of the equipment.

Environmental conditions

The IT6700 series power supply can only be used indoors or in low condensation areas. The following table shows general environmental requirements for this instrument.

Environmental conditions	Requirement
Operating temperature	0°C - 40°C 0°C - 40°C
Operating humidity	20% - 80% (non condensing)
Storage temperature	-20°C - 70 °C
Altitude	Operating up to 2,000 meters
Installation category	II
Pollution degree	Pollution degree 2

NOTE

In order to ensure the accuracy of measurement, it is recommended to operate the instrument half an hour after start-up.

Regulation tag

CE	The CE tag shows that the product complies with the provisions of all relevant European laws (if the year is shown, it indicates that the year when the design is approved).
UK CA	The UKCA tag shows that the product complies with the provisions of all relevant United Kingdom laws (if the year is shown, it indicates that the year when the design is approved).
	This instrument complies with the WEEE directive (2002/96/EC) tag requirements. This attached product tag shows that the electrical/electronic product cannot be discarded in household waste.
10	This symbol indicates that no danger will happen or toxic substances will not leak or cause damage in normal use within the specified period. The service life of the product is 10 years. The product can be used safely within the environmental protection period; otherwise, the product should be put into the recycling system.

Copyright © Itech Electronic Co., Ltd.

Waste electrical and electronic equipment (WEEE) directive

Waste electrical and electronic equipment (WEEE) directive, 2002/96/EC

The product complies with tag requirements of the WEEE directive (2002/96/EC). This tag indicates that the electronic equipment cannot be disposed of as ordinary household waste.

Product Category

According to the equipment classification in Annex I of the WEEE directive, this instrument belongs to the "Monitoring" product.

If you want to return the unnecessary instrument, please contact the nearest sales office of ITECH.

Copyright © Itech Electronic Co., Ltd.

Compliance Information

Complies with the essential requirements of the following applicable European Directives, and carries the CE marking accordingly:

- Electromagnetic Compatibility (EMC) Directive 2014/30/EU
- Low-Voltage Directive (Safety) 2014/35/EU

Conforms with the following product standards:

EMC Standard

IEC 61326-1:2012/ EN 61326-1:2013 [1][2][3]

Reference Standards

CISPR 11:2009+A1:2010/ EN 55011:2009+A1:2010 (Group 1, Class A)
IEC 61000-4-2:2008/ EN 61000-4-2:2009
IEC 61000-4-3:2006+A1:2007+A2:2010/ EN 61000-4-3:2006+A1:2008+A2:2010
IEC 61000-4-4:2004+A1:2010/ EN 61000-4-4:2004+A1:2010
IEC 61000-4-5:2005/ EN 61000-4-5:2006
IEC 61000-4-6:2008/ EN 61000-4-6:2009
IEC 61000-4-11:2004/ EN 61000-4-11:2004

1. The product is intended for use in non-residential/non-domestic environments. Use of the product in residential/domestic environments may cause electromagnetic interference.
2. Connection of the instrument to a test object may produce radiations beyond the specified limit.
3. Use high-performance shielded interface cable to ensure conformity with the EMC standards listed above.

Safety Standard

IEC 61010-1:2010/ EN 61010-1:2010

Copyright © Itech Electronic Co., Ltd.

Contents

Certification and Quality Assurance i
Warranty i
Limitation of Warranty i
Safety signs i
Safety Precautions ii
Environmental conditions iii
Regulation tag iii
Waste electrical and electronic equipment (WEEE) directive iv
Compliance Information v

Chapter I Acceptance and Installation 1

1.1 Confirm package contents 1
1.2 Installation Position 2
1.3 Installation of support 8
1.4 Installation of power cord 8
1.5 Connecting the DUT 9

Chapter II Quick Start 11

2.1 Brief Introduction 11
2.2 Introduction of front panel 12
2.3 Key introduction 13
2.4 VFD Indicator Description 14
2.5 Introduction of rear panel 14
2.6 Power-on selftest 16

Chapter III Function and Features 19

3.1 Switching of local/remote operation modes 19
3.2 Voltage Setup 19
3.3 Current Setup 19
3.4 Output On/Off Operation 20
3.5 Setup value/Actual value switching 20
3.6 Voltage/Current/Power adjustment 20
3.7 Save/recall Operation 20
3.8 Trigger operation 21
3.9 Menu operation 21
3.10 Protective function 28
3.11 Key Lock function 29
3.12 Remote sense function 29

Chapter IV Technical Specification 31

4.1 Main technical parameters 31

Chapter V Remote Operation Mode 42

5.1 RS232 interface 42
5.2 USB interface 43
5.3 RS485 interface 43
5.4 GPIB interface (Only for IT6700(G) series) 44

Appendix 46

Specifications of Red and Black Test Lines 46

Chapter I Acceptance and Installation

Power supply is a high level safety equipment, there is a protected ground terminal. Before Installation or operation, please read the safety signs and instructions in this manual.

1.1 Confirm package contents

Open the package and check the articles within package box before operation. In case of any non-conformity, missing or appearance wearing, please contact ITECH immediately.

The package box should comprise:

Device name	Quantity	Model	Remarks
Power supply	x1	IT6700 series	IT6700 series include: IT6722/IT6722A/IT6723/ IT6723B/IT6723C/IT6723G/ IT6723H/IT6724/IT6724B/ IT6724C/IT6724G/IT6724H/ IT6726C/IT6726V
Power Cord	x1	IT-E171/IT-E172/ IT-E173/IT-E174	The User may select different power cords based on local outlet specification. For detailed specifications, refer to 1.4 Installation of power cord.
Calibration Report	x1	-	Test report before delivery
USB Cable	x1	-	-

NOTE

After confirming that package contents are consistent and correct, please appropriately keep package box and related contents. The package requirements should be met when the instrument is returned to factory for repair.

Optional accessories for IT6700 Series power supply available for independent sales: IT-E151/IT-E151A support

* IT6726C/IT6726V have no optional accessories.

Copyright © Itech Electronic Co., Ltd.

1.2 Installation Position

The instrument should be installed at well-ventilated and rational-sized space. Please select appropriate space for installation based on the power supply size.

The detailed dimension drawings of this series instrument are as follows (unit: mm).

Model IT6722/IT6722A

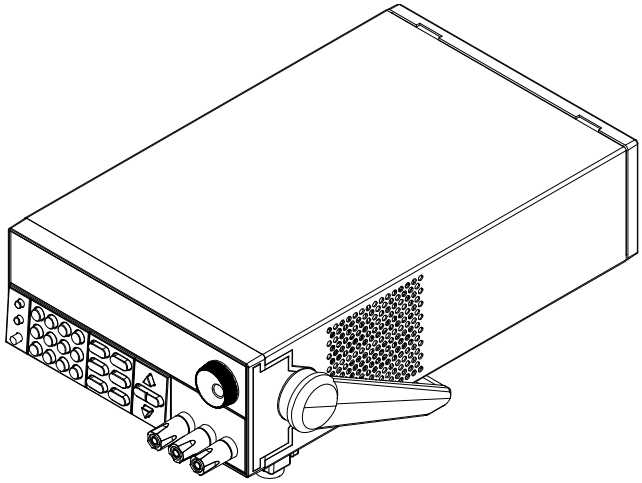

Detailed dimensional drawings

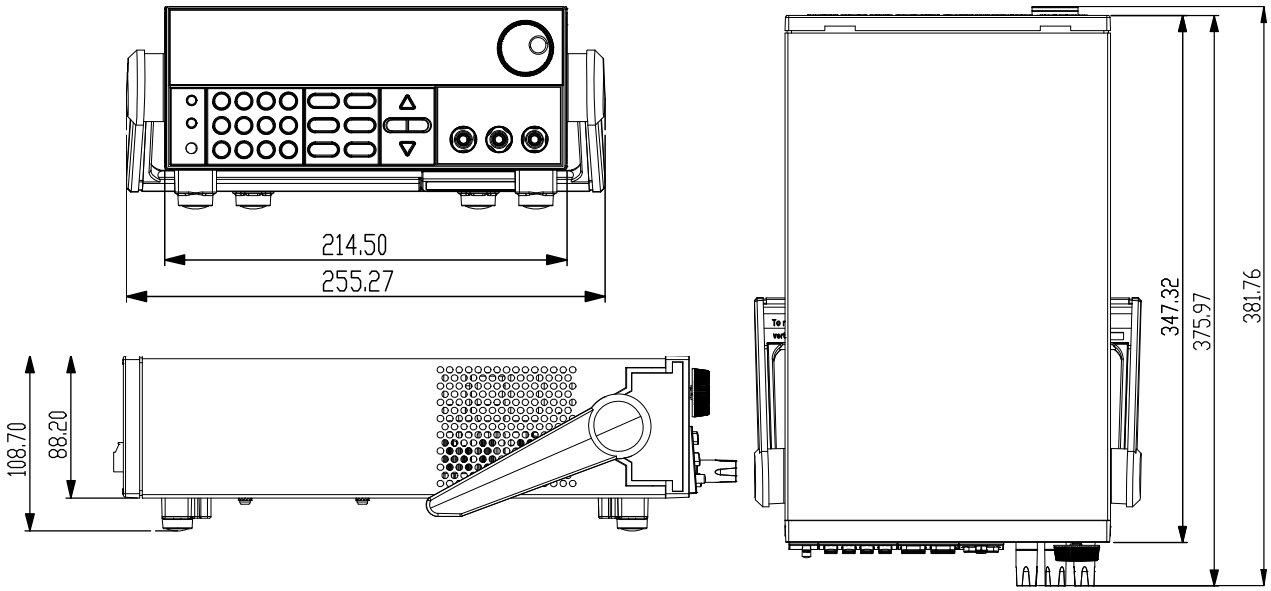

Model IT6723/IT6723B/IT6724/IT6724B

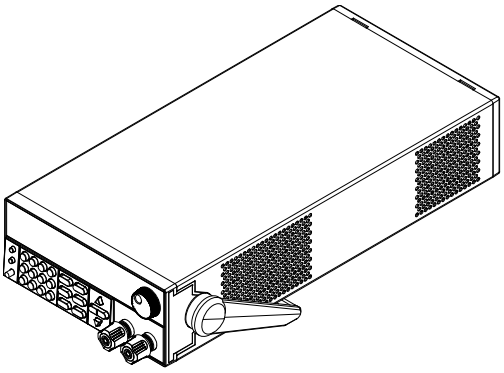

Detailed dimensional drawings

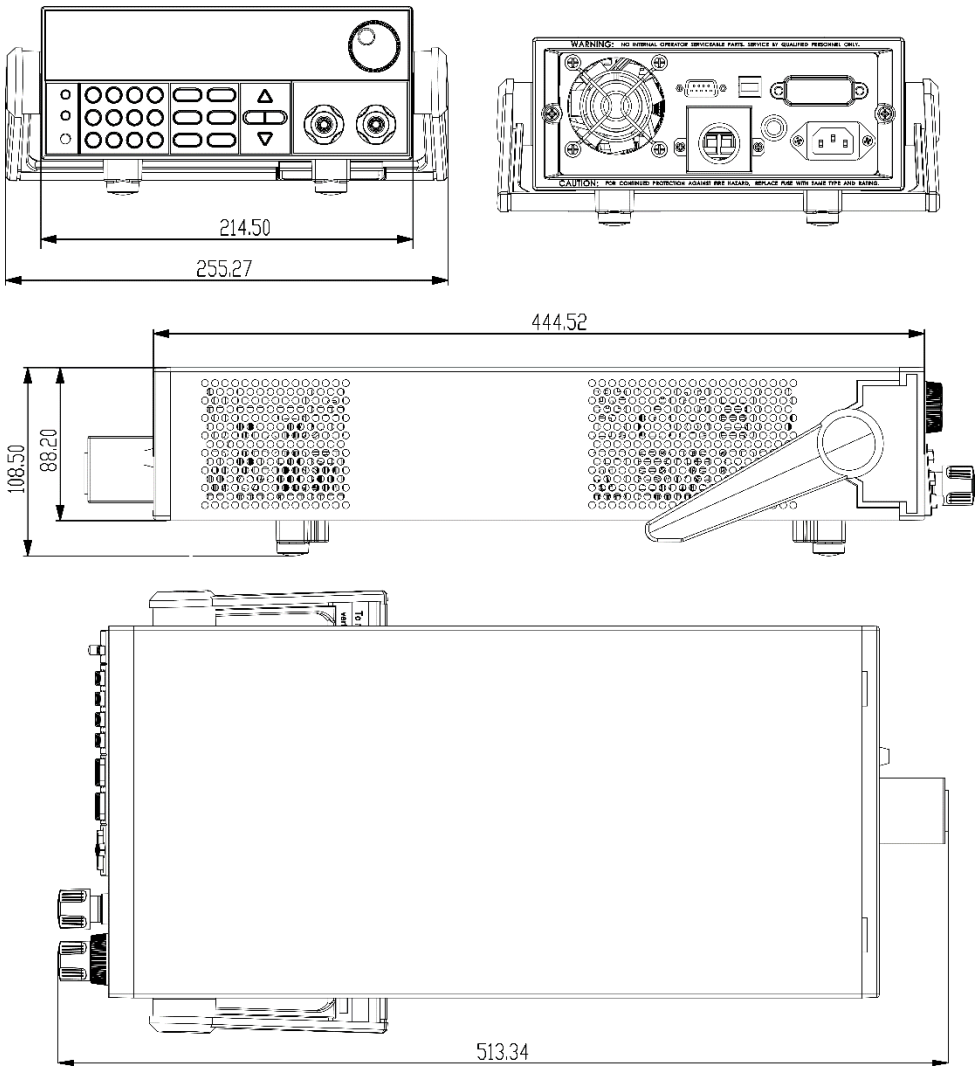

Model IT6723C/IT6724C

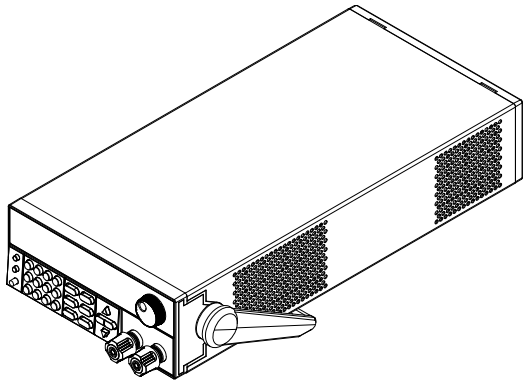

Detailed dimensional drawings

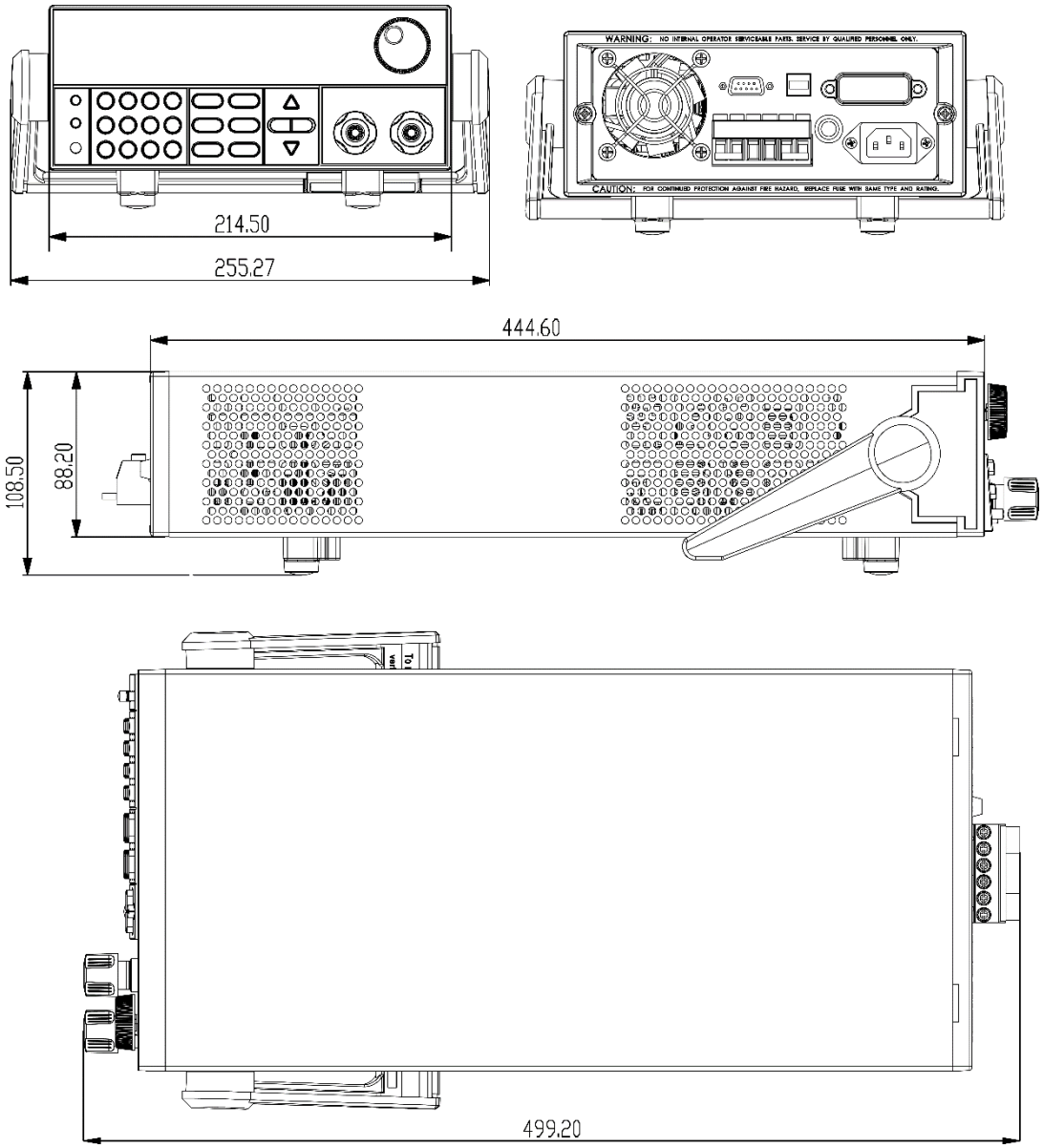

Model IT6723G/IT6723H/IT6724G/IT6724H

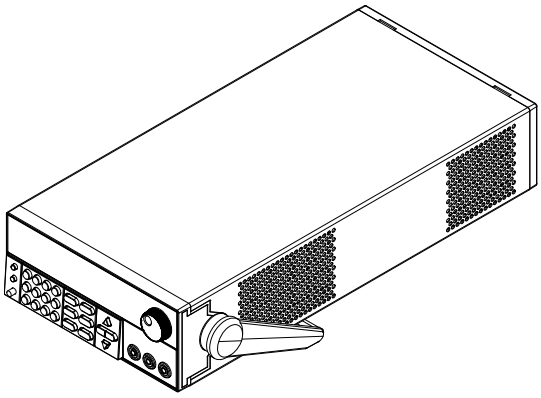

Detailed dimensional drawings

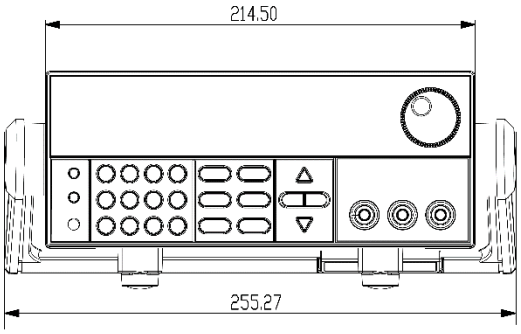

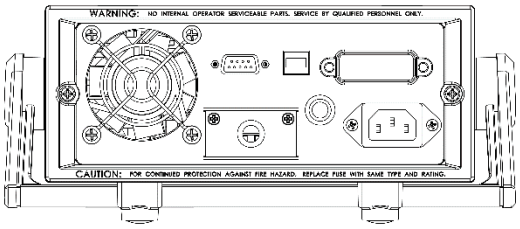

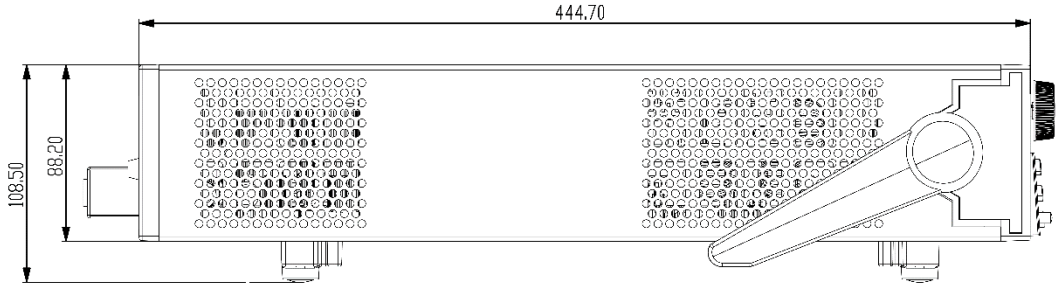

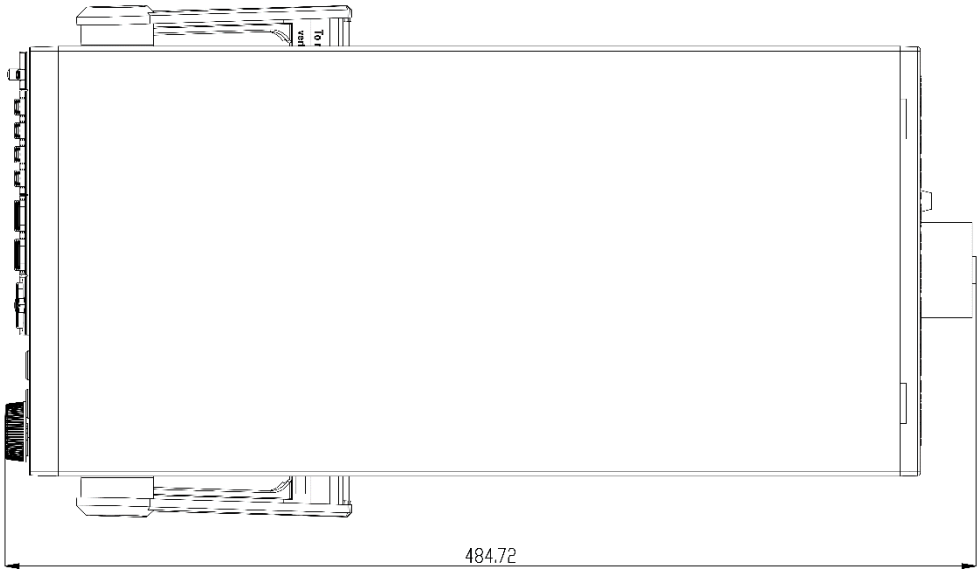

Model IT6726V

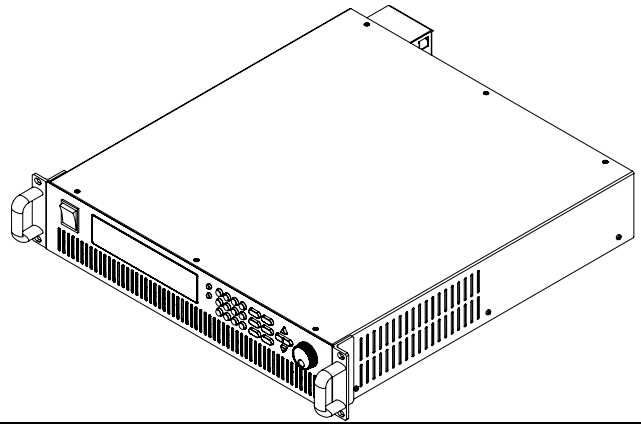

Detailed dimensional drawings

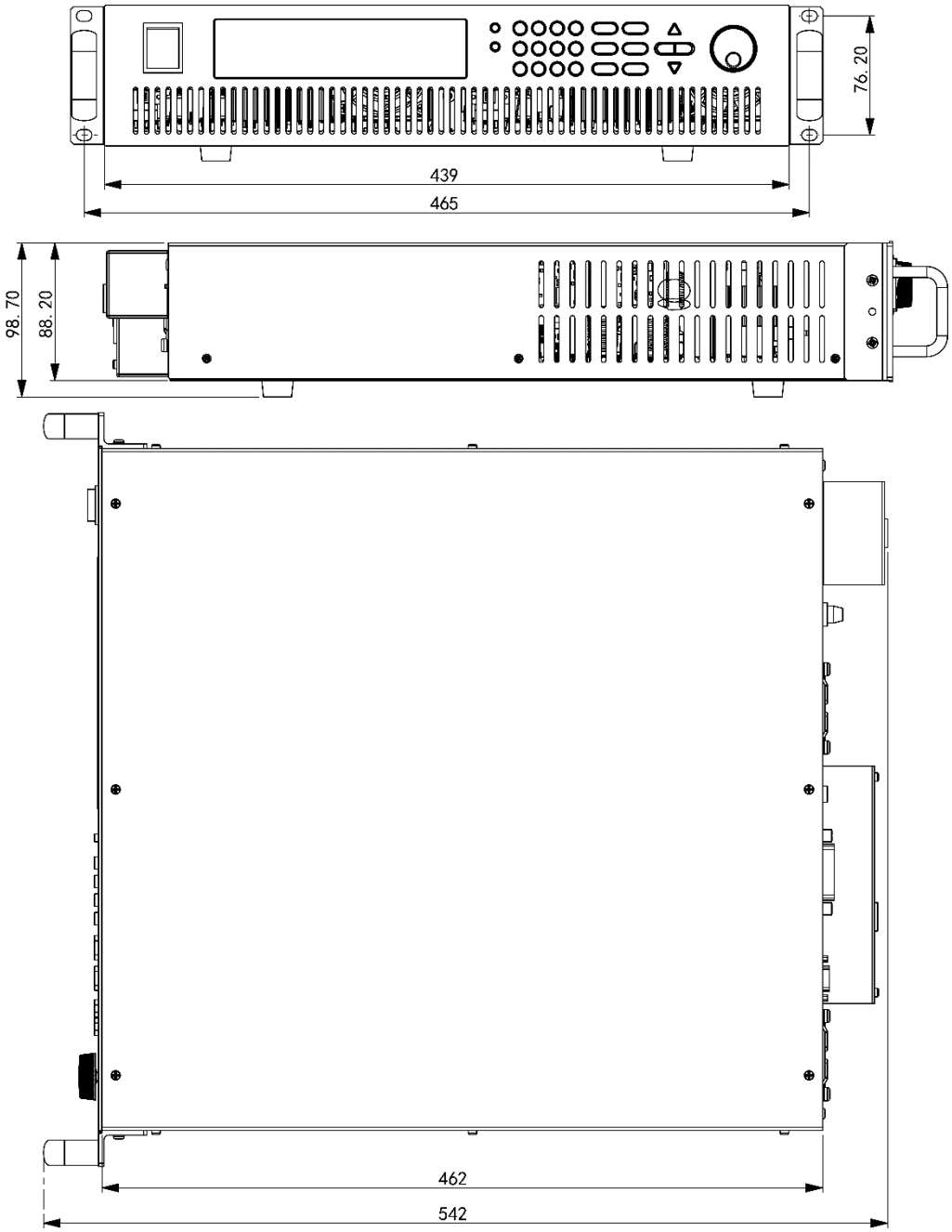

Model IT6726C

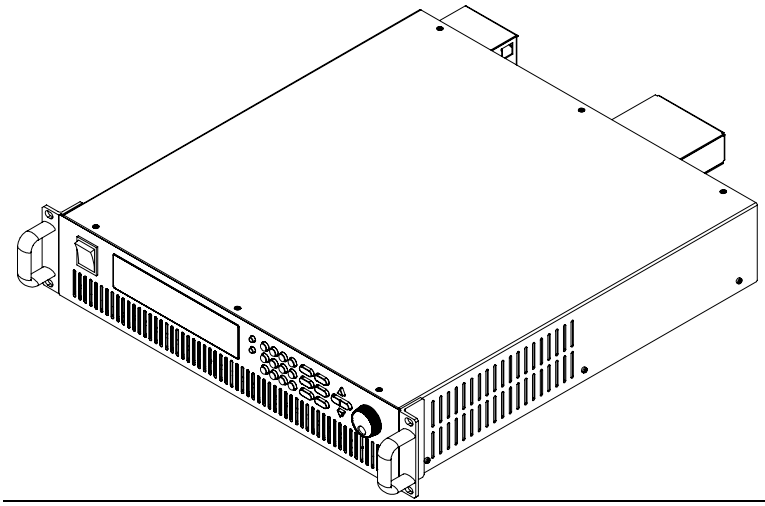

Detailed dimensional drawings

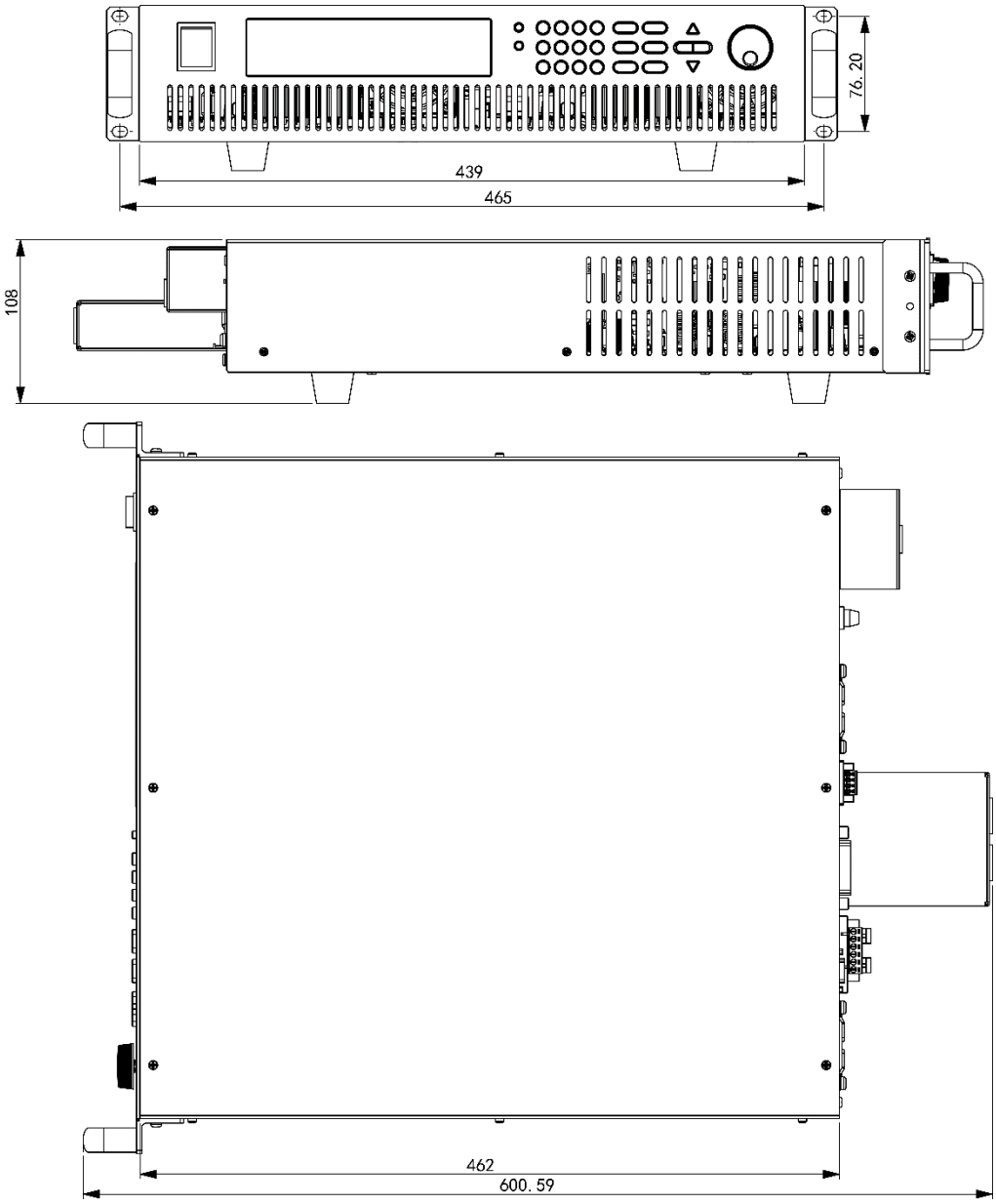

1.3 Installation of support

IT6700 Series power can be mounted on a standard 19” rack. ITECH provides user with IT-E151/IT-E151A rack, as an optional mount kit. The detailed operation please refer to the User Manual of your mount kit.

IT6726V/IT6726C has no accessory, each of them can be installed directly on the 19-inch support through screw holes of the left ear.

1.4 Installation of power cord

Connect power cord of standard accessories and ensure that the power supply is under normal power supply.

AC power input level

IT6700 series contains many models. The input level of different model is different. Please refer to the specifications of different models for detailed input power specifications and maximum apparent power specifications.

NOTE

IT6722, IT6722A, IT6724, IT6724B, IT6724C, IT6724H, IT6724G, IT6726V and IT6726C power supply can also work in 110V±10% voltage circumstances. However, the output power is halved. For full-power output, please use 220V±10% voltage.

Categories of power cords

- IT6722/IT6722A/IT6723/IT6723B/IT6723C/IT6723G/IT6723H/IT6724/IT6724C/IT6724G/IT6724H provides the standard power cords as below.

  Please select appropriate power cords appropriate to local voltage based on the specifications of power cords below. If purchased model fails to meet local voltage requirements, please contact distributor or factory for change.

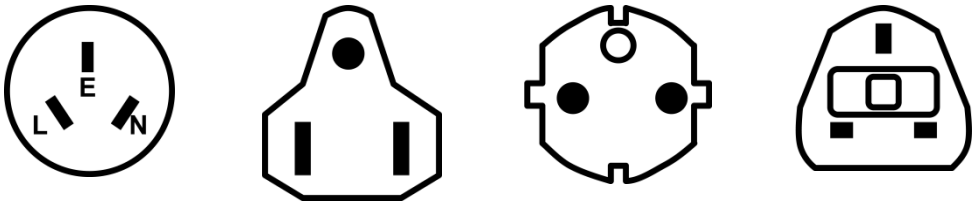

China	America, Canada, Japan	Europe	Britain
IT-171	IT-E172	IT-E173	IT-E174

- IT6726V/IT6726C provides the standard power cords as below.

WARNING

The power cords supplied with this product is certified for safety. In case the supplied lines assembly needs to be replaced, or an extension lines must be added, be sure that it can meet the required power ratings of this product. Any misuse voids the warranty of this product.

Connecting AC Input

- IT6722/IT6722A/IT6723/IT6723B/IT6723C/IT6723G/IT6723H/IT6724/IT6724C/IT6724G/IT6724H Connect standard power cord to the power supply input terminal.
- IT6726V/IT6726C AC input connector as follows.
  See the below illustration, one end of the AC power cord is connected to the AC input terminal in the rear board of the power supply. Connect the fire wire, zero line and ground to the corresponding terminal of the device.

  Connect the plug on the other end of the power cord to your AC 220V power source. Connect the three terminals brown to line (L), blue to neutral (N), and yellow-green to ground (PE) on the other end of the power cord to your AC distribution panel.

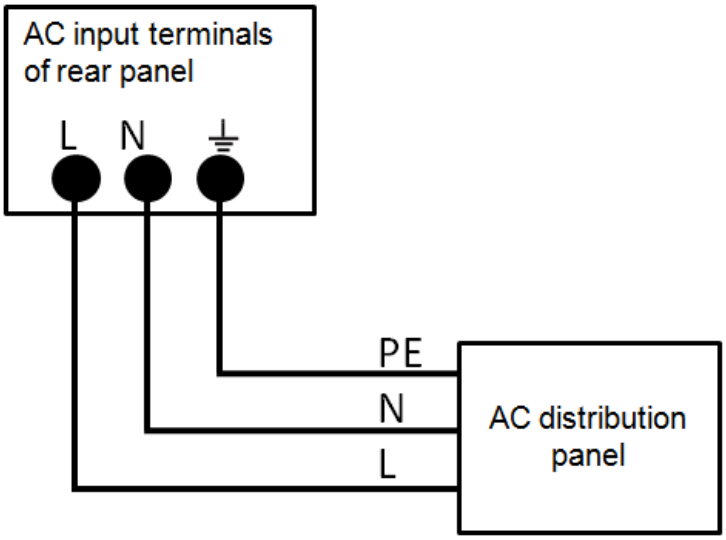

1.5 Connecting the DUT

Before connecting the DUT

Test lines are not standard accessories of the instrument. Please select optional red and black test lines for individual sales based on the maximum current value. For specifications of test lines and maximum current values, refer to "**Specifications of Red and Black Test Lines**" in "**Appendix**".

WARNING

- **Before connecting DUT, be sure to switch off the instrument. Power switch is in Off position. Otherwise, contact with output terminals in rear panel may cause electrical shock.**
- **To avoid electrical shock, before testing, please make sure the rating values of the testing lines, and do not measure the current that higher than the rating value. All test lines shall be capable of withstanding the maximum short circuit output current of the power supply without causing overheat.**
- **If several loads are provided, each pair of load wires shall safely withstand the rated short circuit output current of the power supply under full load.**
- **Always use test lines provided by ITECH to connect the equipment. If test lines from other factories are used, please check that the test line can withstand maximum current.**

- **During wiring, check that the anode and cathode of the test lines are properly and tightly connected; anode ON and cathode OFF are prohibited.**

Introduction of Binding Posts

The maximum rated current of the terminal at position (A) is the maximum rated input current of the instrument. Securely fasten all wires by hand-tightening the binding posts. You can also insert standard banana plugs into the front of the connectors as shown in (B), and the maximum rated current at (B) is 10 A.

- IT6722/IT6722A：

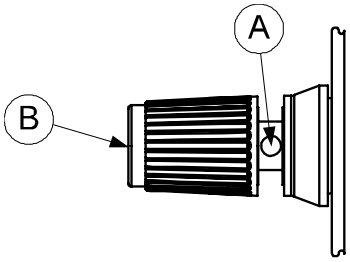

- IT6723/IT6723B/IT6723C/IT6724/IT6724B/IT6724C：

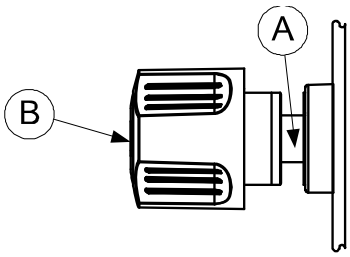

Connecting the DUT

DUT connection is given below taking local measurement as example. For details of local and remote measurements, refer to “**Remote sense function**”.

1. Before connecting the DUT, be sure that the instrument Power is in Off position.
2. Check whether the shorting clip of Sense terminal is correctly mounted.
3. Unscrew the screws of the output terminals and connect the red and black test lines to the output terminals. Re-tighten the screws.

   When maximum current that one test line can withstand fails to meet the current rated current, use several pieces of red and black test lines. For example, the maximum current is 1,200A, then 4 pieces of 360A red and black lines are required.
4. Directly connect the other end of the red and black lines to the DUT terminal.

Chapter II Quick Start

This chapter introduces the front panel, the rear panel, key functions and VFD display function of the power supply, make sure that you can quickly know the appearance, instruction and the key function before you operate the power supply, Help you make better use of this series of power supply.

2.1 Brief Introduction

IT6700 series power supplies are high performance single-output programmable DC power supplied with communication interface. This series of programmable DC power supply can output the maximum voltage or current with a fixed power for customers. IT6700 series power comes with a standard communication interface RS232/USB, both desktop and system-based features, can be designed and tested according to your needs and provide multi-purpose solutions.

Convenient bench-top features:

- High visibility vacuum fluorescent display (VFD)
- Output is switch control
- High accuracy and high resolution
- Intelligent fan control, energy conservation, noise reduction
- Standard communication interface RS232/USB
- Output voltage and current values accordance with procedure
- Can use the knob to adjust the voltage and current
- Can adjust the knob stepping using the cursor

Model		Voltage	Current	Power
IT6722		80V	20A	400W
IT6722A		80V	20A	400W
IT6723	IT6723(G)	80V	40A	850W
IT6723B	IT6723B(G)	150V	20A	850W
IT6723C	IT6723C(G)	32V	110A	850W
IT6723G	IT6723G(G)	600V	5A	850W
IT6723H	IT6723H(G)	300V	10A	850W
IT6724	IT6724(G)	80V	40A	1500W
IT6724B	IT6724B(G)	150V	20A	1500W
IT6724C	IT6724C(G)	32V	110A	1500W
IT6724G	IT6724G(G)	600V	5A	1500W
IT6724H	IT6724H(G)	300V	10A	1500W
IT6726C	IT6726C(G)	32V	220A	3000W
IT6726V	IT6726V(G)	1200V	5A	3000W

Note

- The communication interfaces of different models of series IT6700 are different. Please refer to the corresponding specifications for detailed information.
- IT6700(G) is the model with built-in GPIB, the function is the same as standard model, please check with ITECH for availability.

2.2 Introduction of front panel

- Front panel of IT6722/IT6722A

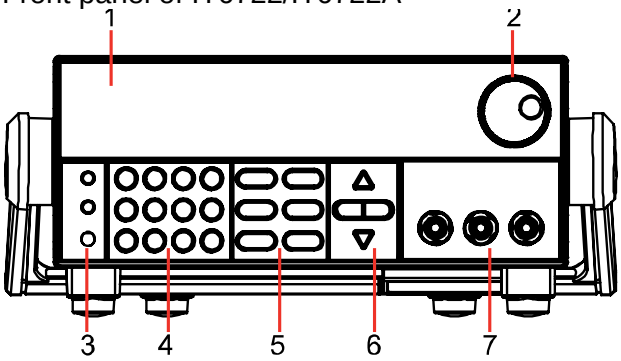

1. VFD screen
2. Adjusting knob
3. Compound key, the local switch key and power switch
4. Number keys and ESC
5. Function keys
6. UP, DOWN, LEFT and RIGHT key, to move cursor
7. Output terminals

- Front panel of IT6723G/IT6723H/IT6724H/IT6724G

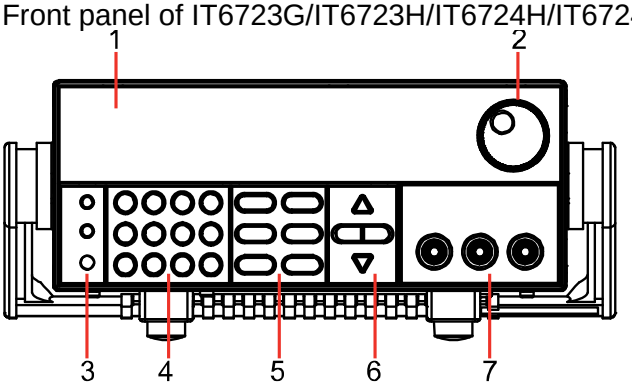

1. VFD screen
2. Adjusting knob
3. Compound key, the local switch key and power switch
4. Number keys and ESC
5. Function keys
6. UP, DOWN, LEFT and RIGHT key, to move cursor
7. Output terminals

- Front panel of IT6723/IT6723B/IT6723C/IT6724/IT6724B/IT6724C

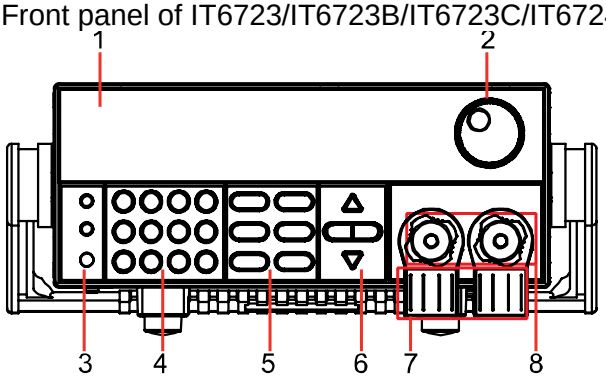

1. VFD screen
2. Adjusting knob
3. Compound key, the local switch key and power switch

Copyright © Itech Electronic Co., Ltd.

4. Number keys and ESC
5. Function keys
6. UP, DOWN, LEFT and RIGHT key, to move cursor
7. Protective cover
8. Output terminals

- Front panel of IT6726V/IT6726C

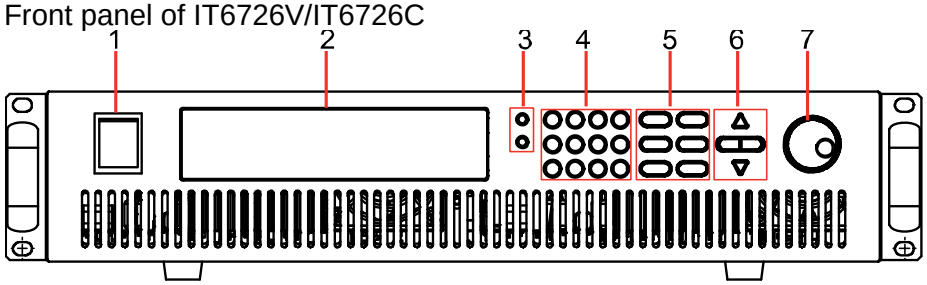

1. Power switch
2. VFD screen
3. Compound key and the local switch key
4. Number keys and ESC
5. Function keys
6. UP, DOWN, LEFT and RIGHT key, to move cursor
7. Adjusting knob

2.3 Key introduction

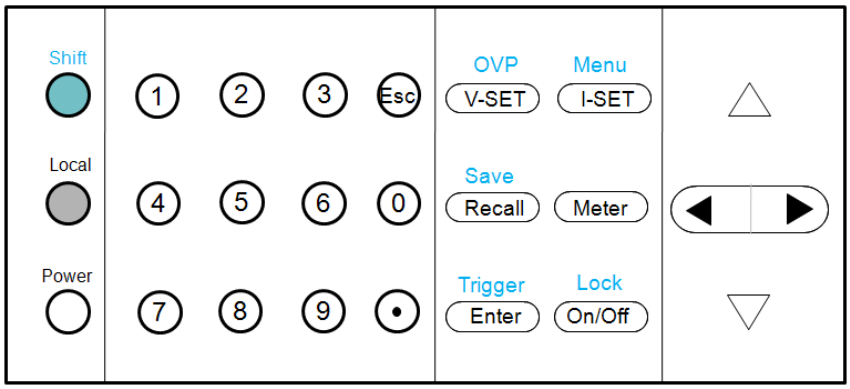

Key description, see the table below:

Keys	Name and the function
(Shift)	Compound key,co-work with OVP、Menu、Save、Trigger、Lock
(Local)	Local switch key, switch from remote mode to local operation mode
(Power)	Power on key
0-9	Numeric keys
V-set /OVP	Voltage set key, set the output voltage/over voltage protection point for the power supply
I-set /Menu	Current set key, set the output current/menu function key, to set the relevant Parameters for the power supply
Recall /Save	Callback key to call up a set value of system parameters already stored / storage key, to save system parameter settings
Meter	Meter key, to switch from value set panel and the actual output value

Enter /Trigger	Enter key, to confirm the number entered and operation / trigger button, which is used to trigger the List test.
On/Off /Lock	Output on (off) keys, control power output state / keypad lock function keys, used to lock the panel buttons
◀ ▶	Left and right movement keys, used to set the value, to adjust the cursor to the specified location
△ ▽	Up and down keys, used to select a item in the menu or increase (decrease) the output voltage or current values
Esc	Cancel /return keys

2.4 VFD Indicator Description

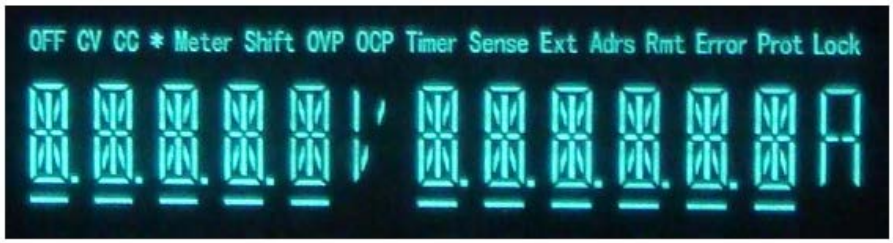

VFD indicator function description as follow:

Char	Function description	Char	Function description
OFF	Output is off	**Timer**	Output on timer function is ON
CV	The power supply is in constant voltage mode	**Sense**	No
CC	The power supply is in constant current mode	**Ext**	No
*****	No	**Adrs**	(USB GPIB)light when the address match or (RS232) received order
Meter	Meter mode	**Rmt**	The power supply is in remote mode
Shift	Use compound keys	**Error**	The power supply has error or fault
OVP	OVP function state on	**Prot**	OVP /OTP/OCP Protection
OCP	OCP function state on	**Lock**	Key operation is locked

2.5 Introduction of rear panel

- Rear panel of IT6722

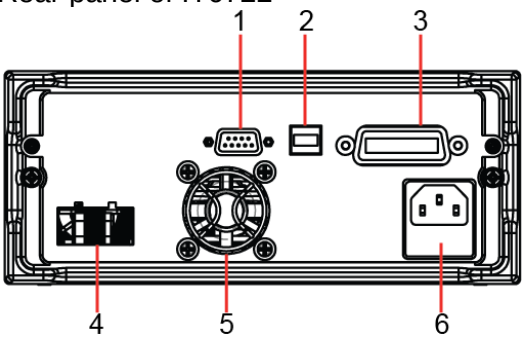

1. RS232 Communication interface
2. USB Communication interface
3. GPIB Communication interface
4. Remote sense terminal and the output terminal
5. Cooling fans
6. AC power socket

- Rear panel of IT6722A

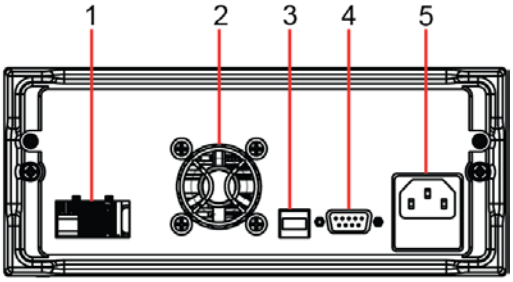

1. Remote sense terminal and the output terminal
2. Cooling fans
3. USB Communication interface
4. RS232 Communication interface
5. AC power socket

- Rear panel of IT6723/IT6723B/IT6723C/IT6723G/IT6723H/ IT6724/IT6724C/IT6724G/IT6724H/ IT6724B

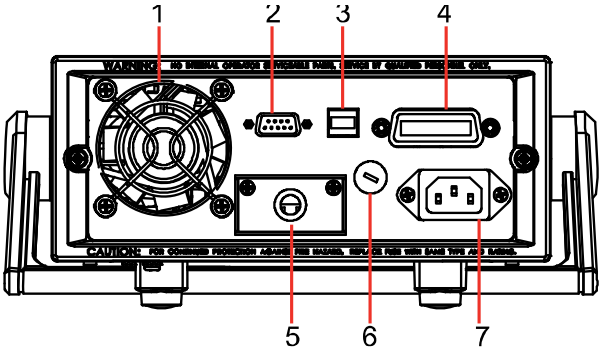

1. Cooling fans
2. RS232 Communication interface
3. USB Communication interface
4. GPIB Communication interface (Only for IT6700(G) series)
5. Remote sense terminal and the output terminal
6. Fuse
7. AC power socket

- Rear panel of IT6726V

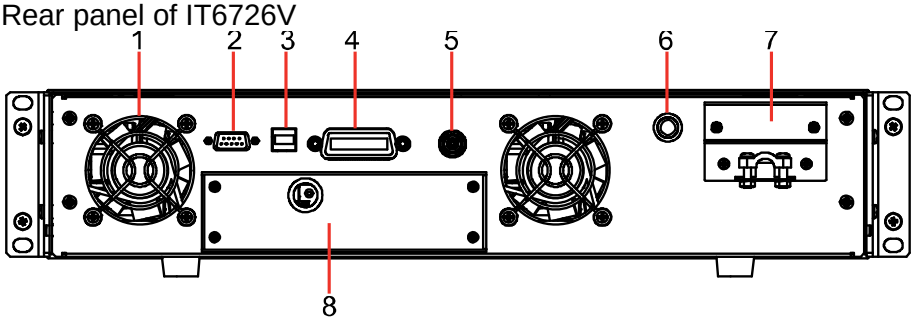

1. Cooling fans

2. RS232 Communication interface
3. USB Communication interface
4. GPIB Communication interface (Only for IT6700(G) series)
5. factory using terminal
6. Fuse
7. AC power socket
8. Remote sense terminal and the output terminal

NOTE

Above the output terminals in the rear panel of IT6726V has a factory using terminal, which users cannot use.

- Rear panel of IT6726C

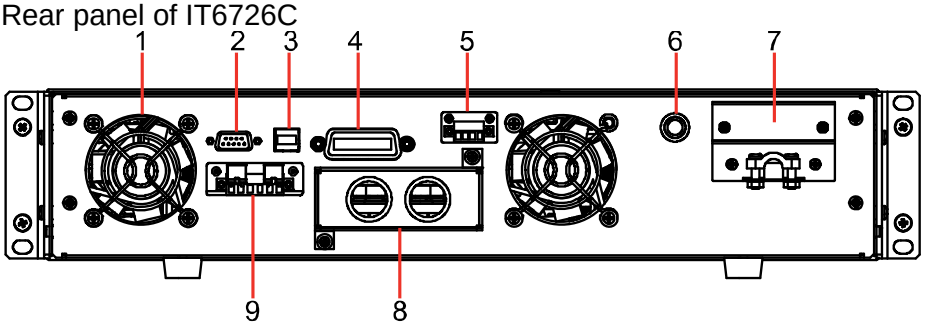

1. Cooling fans
2. RS232 Communication interface
3. USB Communication interface
4. GPIB Communication interface (Only for IT6700(G) series)
5. RS485 Communication interface
6. Fuse
7. AC power socket
8. the output terminal
9. Remote sense terminal

2.6 Power-on selftest

A successful selftest indicates that the purchased power product meets delivery standards and is available for normal usage.

Before operation, please confirm that you have fully understood the safety instructions.

WARNING

- To avoid burning out, be sure to confirm that power voltage matches with supply voltage.
- Be sure to connect the main power socket to the power outlet of protective grounding. Do not use terminal board without protective grounding. Before operation, be sure that the power supply is well grounded.
- To avoid burning out, pay attention to marks of positive and negative polarities before wiring.

Selftest steps

Normal selftest procedures:

1. Correctly connect the power cord. Press **Power** key to start up.

2. After selftest, VFD display the output voltage and current status as below:

```
OFF
0.0V        0.00A
```

Error Information References

The following error information may occur when an error occurs during Power On self-test:

- If the EEPROM was damaged, the VFD will display “EEPROM FAIL”.
- If the last power status in EEPROM is lost, then VFD will display “SYST LOST”.
- If the calibration data in EEPROM is lost, then VFD will display “CAL LOST”.
- If the factory calibration data in EEPROM is lost, and then the VFD will display “FACT LOST”.

Exception handling

If the power supply can not start normally, please check and take measures by reference to steps below.

1. Check whether the power cord is correctly connected and confirm whether the power supply is powered.

   Correct wiring of power cord => 2

   Incorrect wiring of power cord => Re-connect the power cord and check whether the exception is removed.

2. Check whether the power in On. Power key is under “I” On status.

   Yes => 3

   No => Please check the Power key to start power and check whether the exception is removed.

3. Check whether the fuse of power supply is burned out.

   If yes, change fuse. Detailed steps:

   1) Use a screwdriver to push and turn the fuse box on the rear panel of the power supply, refer to the below picture. After the fuse box is opened, you can see the fuse in it. Please replace with a fuse of the same specification.

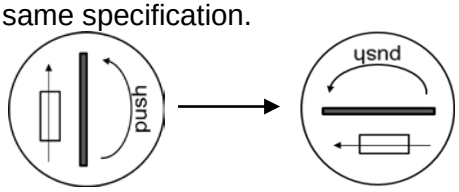

   2) Have a visual inspection of the fuse to see whether it is burnt out; if yes, replace it with another fuse of the same specification, for detailed specification, please refer to the **chapter Specification**.

   3) When install, use a screwdriver to push and turn the fuse box. Refer to the picture below.

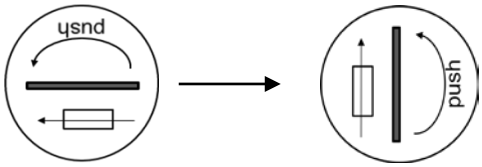

NOTE

Fuse of IT6726C/IT6726V can unscrew directly by hand.

Chapter III Function and Features

This chapter will introduce the basic operation of IT6700 series power supply, including the following subdivisions:

- Switching of local/remote operation modes
- Voltage setup
- Current setup
- Output on/off operation
- Setup value/actual value switching
- Voltage/current/power adjustment
- Save/recall operation
- Trigger operation
- Menu operation
- OVP protection function
- Key lock function
- Remote sense function

3.1 Switching of local/remote operation modes

Local button can enable you switch mode from remote to local mode.

After you power on the power supply, the power supply's default mode is local mode, all the buttons can be used in this mode. While in remote mode, you can't operate through front panel directly except Meter and Local keys. Local and remote mode can be controlled through PC. In addition, the mode changing will not influence the output parameters.

3.2 Voltage Setup

You can set voltage within the range of rated voltage value. When you press V-set button, the button will be lit. This indicates that you can set voltage. There are three ways to set output voltage through front panel.

- The first way: press V-set, adjust cursor location through ◀▶ button, pressing △ and ▽ will enable you to adjust the setting voltage value.
- The second way: press V-set, adjust cursor location through ◀▶ button, adjust rotary knob to change the setting voltage value.
- The third way: press V-set button and number key(0 to 9) to set voltage value

3.3 Current Setup

You can set current within the range of rated current value. When you press I-set button, the button will be lit. This indicates that you can set current. There are three ways to set output current through front panel.

- The first way: press I-set ,adjust cursor location through ◀▶

button, push △ and ▽ will enable you to adjust the setting current value.

- The second way: press I-set ,adjust cursor location through ◀▶ button, adjust rotary knob to change the setting current value.
- The third way: press I-set button and number key(0 to 9) to set current value

3.4 Output On/Off Operation

On/Off button is used to control the output state of power supply. When On/Off button is lit, this indicates the output is in on mode. When output is open, the working state indicator light(CV/CC) will be lit.

NOTE

Make sure you have connected power supply and the test unit well, then press On/Off button. If there is no voltage output, you should first check the voltage and current set.

3.5 Setup value/Actual value switching

You can switch the display between setting value and actual value by pressing Meter button. When this button is lit, screen displays actual output value and the indicator light “Meter” will be lit on the VFD. In other words, when the button is not lit, the front panel displays setting value.

3.6 Voltage/Current/Power adjustment

The output current value is determined by output voltage of power supply and electronic load’s resistance. Only when the actual current value is lower than the setting current value, can power supply work in CV mode and the will CV indicator light be lit.

If output current is higher than the setting value, then power supply will function in CC mode. And the CC indicator light will be lit.

The output voltage and current value are also influenced by the upper limit of output power.

Take IT6723H (300V/10A/850W) for example, suppose you set the voltage to 100V, then the current can just reach 8.5A(limited by the power).

3.7 Save/recall Operation

Customer can save some often-used parameters in nonvolatile memory. You can use the button (Shift)、 Recall (Save) button or SCPI order *SAV、*RCL to achieve this function. Saving parameters include:

1.setting voltage 2.setting current 3. OVP value 4. OCP value

Saving operation:

Press (Shift)+ Recall (save) button(Recall button will flash), and then input the group number you want to save through number key board. Press Enter button to confirm.

Recall operating:

Press Recall button (Recall button will lit), and press corresponding group

number(number1-9).At last press Enter button to confirm.

NOTE

The memory capacity is 9*8, which indicate 8 memory groups and 9 memory in each group. The memory group you use at the present should be selected in the Menu(MEM GROUP)., refer to chapter 3.9.

3.8 Trigger operation

The trigger source of IT6700 include manual and BUS, manual means trigger by button of the front panel, and BUS means trigger by command from the PC. You need to select the trigger source (TRIG) from the menu before using this function.

After you edit a list file, press (Shift) + Enter (Trigger) to give a trigger signal. During the running process, Enter button will flash all the time.

3.9 Menu operation

Press (Shift) + I-set (Menu) to enter the menu. You will see a optional items on the screen, through direction keys and rotary knob to overturn VFD display, then the screen will display the following functions .Press Enter button will enter corresponding items. Press ESC button will return to previous menu.

IT6722/IT6723/IT6723B/IT6723C/IT6723G/IT6723H/IT6724/IT6724B/IT6724C/IT6724G/IT6724H/IT6726V power supply menu function is shown as below.

MAX VOLT	Set the max voltage output limit			
OCP SET	**OFF**	Disable the OCP function		
	ON	Enable the OCP function		
SYST SET	**P-MEM (RESET)**	**Reset**	Power on parameter is restored to factory setting	
		Keep	Set the power-on parameter as the last power off state	
	P-OUT (OFF)	**OFF**	Set the power-on output state to be Offt	
		Keep	Set the power-on output state to be the last power-off output state	
	COMM	**GPIB**	**ADDR**	Address can be set within 0-30
		RS232	**BAUD**	4800
				9600
				19200
				38400
				57600
				115.2K
			NONE 8BIT	NONE 8BIT
				EVEN 8BIT
				ODD 8BIT
			MODE	SIGNAL
				MUX: Address can be set within 0-30
		USB	Select USB communication interface	
	BEEP (ON)	**OFF**	Disable the key sound	
		ON	Enable the key sound	
	KNOB (ON)	**LOCK**	Lock the rotary knob function	

		ON	Un-lock the rotary knob function	
	TRIG (MANUAL)	**MANU**	Local keyboard trigger	
		BUS	Trigger by command	
	MEM (GROUP1)	**GRP1-8**	Select memory group for Save and recall operation	
	TIMER SET	**OFF**	Disable the timer function	
		ON	Enable the timer function, time range 0.1-99999S	
	RESET	**NO**	keep the present settings	
		YES	restore the factory setting	
	EXIT	Quit the menu setting		
LIST SET	**LIST STATE**	**OFF**	Set the LIST state as OFF	
		ON	Set the LIST state as ON	
	LIST LOAD	Re-load the LIST file(FILE0-FILE9)		
	LIST EDIT	**TIME (SEC)**	**SEC**	Second
			MIN	Minute
		VSET	Set the voltage for present step	
		ISET	Set the current for present step	
		SEC	Setup single step delay time (0.1-9999)	
		NEXT (YES)	**YES**	continue the edit of next step
			NO	End up the list file edit
		REPET	**1-65535**	Set the cycle count of list file
		SAVE	**NO**	Un-save the current LIST file
			FILE0-FILE9	Save the list file to appointed memory
	EXIT	Exit the system menu		
POWER INFO	**MODEL ITXXXX**	Unit model		
	VER	the software version		
	SN-1 XXXXXX	the first six number of SN		
	SN-2 XXXXXX	the middle six number of SN		
	SN-3 XXXXXX	the last six number of SN		
	EXIT	Exit the information menu		
EXIT MENU	Exit the main menu			

IT6722A power supply menu function is shown as below.

MAX VOLT	Set the max voltage output limit			
SYST SET	**P-MEM (RESET)**	**Reset**	Power on parameter is restored to factory setting	
		Keep	Set the power-on parameter as the last power off state	
	P-OUT (OFF)	**OFF**	Set the power-on output state to be Off.	
		Keep	Set the power-on output state to be the last power-off output state	
	COMM	**RS232**	**BAUD**	4800
				9600
				19200
				38400
				57600
				115.2K
			NONE 8BIT	NONE 8BIT
				EVEN 8BIT
				ODD 8BIT

		USB	Select USB communication interface	
	BEEP (ON)	**OFF**	Disable the key sound	
		ON	Enable the key sound	
	KNOB (ON)	**LOCK**	Lock the rotary knob function	
		ON	Un-lock the rotary knob function	
	TRIG (MANUAL)	**MANU**	Local keyboard trigger	
		BUS	Trigger by command	
	MEM (GROUP1)	**GRP1-8**	Select memory group for Save and recall operation	
	TIMER SET	**OFF**	Disable the timer function	
		ON	Enable the timer function, time range 0.1-99999S	
	RESET	**NO**	keep the present settings	
		YES	restore the factory setting	
	EXIT	Quit the menu setting		
LIST SET	**LIST STATE**	**OFF**	Set the LIST state as OFF	
		ON	Set the LIST state as ON	
	LIST LOAD	Re-load the LIST file(FILE0-FILE3)		
	LIST EDIT	**TIME (SEC)**	**SEC**	Second
			MIN	Minute
		VSET	Set the voltage for present step	
		ISET	Set the current for present step	
		SEC	Setup single step delay time (0.1-9999)	
		NEXT (YES)	**YES**	continue the edit of next step
			NO	End up the list file edit
		REPET	**1-65535**	Set the cycle count of list file
		SAVE	**NO**	Un-save the current LIST file
			FILE0-FILE9	Save the list file to appointed memory
	EXIT	Exit the system menu		
POWER INFO	**MODEL ITXXXX**	Unit model		
	VER	the software version		
	SN-1 XXXXXX	the first six number of SN		
	SN-2 XXXXXX	the middle six number of SN		
	SN-3 XXXXXX	the last six number of SN		
	EXIT	Exit the information menu		
EXIT MENU	Exit the main menu			

IT6726C power supply menu function is shown as below.

MAX VOLT	Set the max voltage output limit			
OCP SET	**OFF**	Disable the OCP function		
	ON	Enable the OCP function		
CHANG	**MODE**	**ON**	Enable the charge-mode function	
		OFF	Disable the charge-mode function	
SYST SET	**P-MEM (RESET)**	**Reset**	Power on parameter is restored to factory setting	
		Keep	Set the power-on parameter as the last power off state	
	P-OUT (OFF)	**OFF**	Set the power-on output state to be Off	
		Keep	Set the power-on output state to be the last power-off output state	
	COMM	**GPIB**	**ADDR**	Address can be set within 0-30

		RS232	BAUD	4800	
				9600	
				19200	
				38400	
				57600	
				115.2K	
			NONE 8BIT	NONE 8BIT	
				EVEN 8BIT	
				ODD 8BIT	
			MODE	SIGNAL	
				MUX	Address can be set within 0-30
		USB	Select USB communication interface		
		RS485	BAUD	4800	
				9600	
				19200	
				38400	
				57600	
				115.2K	
			NONE 8BIT	NONE 8BIT	
				EVEN 8BIT	
				ODD 8BIT	
			MODE	SIGNAL	
				MUX	Address can be set within 0-30
	BEEP (ON)	OFF	Disable the key sound		
		ON	Enable the key sound		
	KNOB (ON)	LOCK	Lock the rotary knob function		
		ON	Un-lock the rotary knob function		
	TRIG (MANUAL)	MANU	Local keyboard trigger		
		BUS	Trigger by command		
	MEM (GROUP1)	GRP1-8	Select memory group for Save and recall operation		
	TIMER SET	OFF	Disable the timer function		
		ON	Enable the timer function, time range 0.1-99999S		
	RESET	NO	keep the present settings		
		YES	restore the factory setting		
	EXIT	Quit the menu setting			
LIST SET	LIST STATE	OFF	Set the LIST state as OFF		
		ON	Set the LIST state as ON		
	LIST LOAD	Re-load the LIST file(FILE0-FILE9)			
	LIST EDIT	TIME (SEC)	SEC	Second	
			MIN	Minute	
		VSET	Set the voltage for present step		
		ISET	Set the current for present step		
		SEC	Setup single step delay time (0.1-9999)		
		NEXT (YES)	YES	continue the edit of next step	
			NO	End up the list file edit	

		REPET	**1-65535**	Set the cycle count of list file
		SAVE	**NO**	Un-save the current LIST file
			FILE0-FILE9	Save the list file to appointed memory
	EXIT	Exit the system menu		
POWER INFO	**MODEL ITXXXX**	Unit model		
	VER	the software version		
	SN-1 XXXXXX	the first six number of SN		
	SN-2 XXXXXX	the middle six number of SN		
	SN-3 XXXXXX	the last six number of SN		
	EXIT	Exit the information menu		
EXIT MENU	Exit the main menu			

NOTE

Pressing ESC button can enable you to quit any function setting.

Maximum voltage set (MAX VOLT)

The range of setting voltage is from 0V to rated voltage. You can press (Shift) **+** I-set (Menu) button to enter the menu, then press △、▽ key to select >MAX VOLT item. Press Enter button to confirm. After you set the max voltage value, the output voltage value can only be set within the max voltage. The default max voltage value is the rated value.

Charge-mode function set (CHANG)

This function is used for IT6726C power to battery charging. When ON option is selected, the power output is turned off after completing the battery charge, meanwhile the power will not reverse current, that is to say the battery will not discharge. When OFF option is selected, the power will reverse current after the battery charge finished and the battery will discharge. The default setting is OFF option.

NOTE

In addition to providing a battery charge, IT6726C power is used for other work, please select OFF option for CHANG function. If the function is selected for CHANG ON option, when the power output is turned off, fall-time of the power becomes very long.

Only IT6726C Power contains CHANG function.

Power-on parameters set (P-MEM)

This item can set power on parameters. If you select RESET item, then all the parameters will be initialized to the factory setting. Output voltage and current will always be 0V/max rated current; if set to **Keep**, the output value will be the same with last power off state. The default setting is RESET item.

Power On Output State (P-OUT)

This item can set the power on output state. If you select **KEEP** item, that indicates the power on output state is the same with output state before this item is set. If you select **Off** item, unit will automatically in off mode when you power on. Default setting is **Off** item.

Communication (COMM)

Our unit has provided three standard communication interfaces: RS232/USB/GPIB. In this option, you can select the communication interface according to your demands. The range of GPIB address is 0-30. Besides, we have multi-baudrate to be chosen in RS232 mode---4800,9600,19200,38400,57600,115.2K.Data bit is 8,Check digit have three choices: NONE, ODD, EVEN. Before you begin to carry out communication, please make sure the configure in our unit agrees with PC configure.

Key Sound Set (BEEP)

This item can set the key sound state. If in **On** mode, the power supply will issue beeper sound when you press any button. If in **Off** mode, the beeper will not make a sound. The default set is in on mode.

Rotary Knob Set (KNOB)

This item is used to set rotary knob state. In **On** mode, you can use this rotary knob to set the output value and overturn the menu items. In **Lock** mode, this knob can't be used. The default setting is in **On** mode.

Trigger source (TRIG)

Before you running a list file, you need a trigger signal. Thus you must set the trigger mode first: keyboard trigger or command trigger. In **MANU** trigger mode, press (Shift)+ Enter button can generate a trigger signal. In **BUS** trigger mode, you can only trigger through sending command. The default set is **MANU** option.

Memory Group Set (MEM GROUP)

Power supply can save some often-used parameters in a nonvolatile memory(capacity is 9*8 groups).This function can make the operations more convenient. Customer can save and recall parameters quickly.

GRP1: This indicates saving power supply parameters in 1-9 groups. Press (Shift)+ Recall (Save) and the group number(1-9) can save the parameters in corresponding groups.

GRP2: This indicates saving the parameters in 10-18 groups. Press (Shift) + Recall (Save)+saved group number(1-9)can save related parameters. Note that the current number "1" represents parameters are saved in 10th groups. Number "2" represents the parameters are saved in 11th groups.

GRP3-GRP8 by parity of reasoning.

Detailed Save and Recall operation refer to chapter 3.7.

Timer Set (TIMER SET)

This item is used to set the "time on- load" function, time range 0.1-99999S .In **ON** mode, the indicator light "Timer" will be lit on the VFD screen. When output of power supply is opened, timer will begin to work, after reaching the definite time, output will be off automatically. If in **OFF** mode, the timer function will not be enabled. The default set is **OFF**.

Reset (RESET)

This item is used to reset all items in the menu. If you select **YES**, then unit will

restored to factory setting. If you select **NO**, all settings in the menu will remain unchanged.

List (List Set)

IT6700 series power supply provides 9 list files, each list file includes 150 steps. Before you edit a list file, please set the trigger mode: manual mode.

Press (Shift)**+** I-set (Menu)button to enter the menu, then press direction key to select >**SYST SET** option, after that please push Enter button to confirm. At last to press direction key to select >**Trig MANUAL** and push Enter button to confirm.

You can make the output change order by editing every step value of list operation. The parameters you need to edit includes: single-step voltage, single-step current, single-step delay time and whether to go on the next step. Besides, you also need to set the repeat times and save list sequence file. After the editing process, at this time if a trigger signal is received, power supply will begin to work according to the sequence steps you've edit. Now we take five steps for an example.

Operation steps:

1. Press (Shift) **+** I-set (Menu)button to enter the menu.
2. VFD display >**MAX VOLT**, press ▽ to select >**LIST SET**, press Enter to confirm
3. VFD display >**LIST STATE**, press ▽ to select >**LIST EDIT**, press Enter to confirm.
4. VFD display >**TIME SEC**, press Enter to confirm, go to the next step, you can also through ▽ button to select **>TIME MIN** time unit, press Enter to confirm.
5. VFD display >**VSET 0.0**, press number key 0 to 9 or through rotary knob to set voltage, after that press Enter to confirm.
6. VFD display **ISET 0.00**, press number key 0 to 9 or rotary knob to set the single-step current, press Enter to confirm.
7. VFD display **SEC 0.100**, press number key 0 to 9 or rotary knob to set single-step delay time, press Enter to confirm(range is 0.1-9999). If you choose MIN for the 4th step, VFD will display **MIN 0.100** for this step, time range 0.1~9999min.
8. VFD display **NEXT >YES**, press Enter to confirm.
9. Repeat the steps from 5) to 8) and set the four steps' voltage/current and delay time separately. When screen display **NEXT>YES** in the fourth step edit process, please press ▽ to select **NEXT >NO,** press Enter to confirm.
10. VFD display **REPET 1,**press number key 0 to 9 or rotary knob to set the repeat times, press Enter to confirm.
11. VFD display **SAVE >NO**, press Enter to confirm, in this circumstance, the list file is not saved but can run for one time, or you can press ▽ button to select **>SAVE FILE0**,saving the list test file in FILE0~FILE9,press

Enter to confirm. You can recall the file in the following utilization.

12. If you do not save the list test file, VFD will display **LIST EDIT**; if you select to save the test file, VFD will display **SAVE DONE** for three seconds, and then display **LIST EDITL**.

Set List State

13. Press △ to select >**LIST STATE item**, press Enter to confirm.
14. **VFD** display **LIST >OFF,** press ▽ to select **>LIST >ON,** press Enter to confirm. Now Enter button will be lit. This indicates that list operation function has been opened.
15. VFD display >**LIST STATE**, pressing Esc button can quit the operation.

Run list file

16. Press On/Off button to open the output, press (Shift)**+** Enter (Trigger)to give a trigger signal.

Recall list file

17. If you have edited several list files, you can select **LIST LOAD** item to recall the file you need. And then press Esc to quit this operation. Press On/Off button to open the output. Now you only need to press (Shift)**+** Enter (Trigger) to give a trigger signal, the list file can be ran.

Quit list file

18. In LIST mode, voltage set and current set button can't be used, In **LIST STATE** item, choose **LIST>OFF** will enable you to quit list mode.

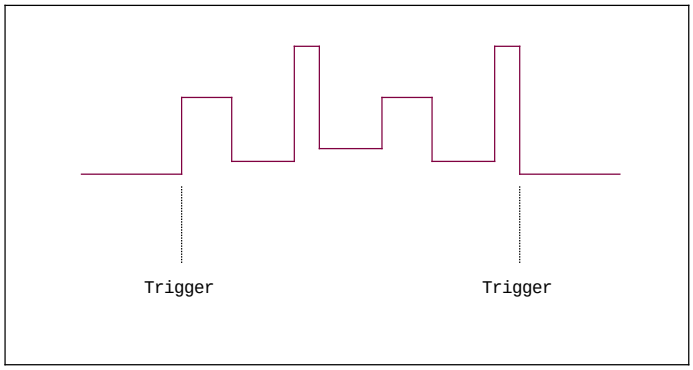

3.10 Protective function

The power supply is provided with following protective functions: over-voltage protection (OVP), over-current protection (OCP) and over-temperature protection (OTP).

Over voltage protection (OVP)

IT6700 series power supply provide OVP function, press (Shift) **+** V-set button can enable you to set the over voltage protection level. Over voltage may caused by internal defect or customer's incorrect operation(such as output voltage rising),or a too high external voltage. Once OVP function is triggered, the output will be off immediately and "OVP" indicator light will be lit, the VFD

display “OVER VOLT”.

Avoid external voltage that across the output terminals exceeding the 120% of rated voltage or it will damage out power supply!

When power supply in OVP state, please check the external factors first, after you exclude the external factors, press ON/OFF button to open output again. If in communication state originally, you should by sending order OUTP ON order to open output.

Over current protection (OCP)

Over current protection feature allows the user to set an over current protection point, when the current in the circuit is larger than the current protection point, the power supply will enter OCP protection. Over current protection, power output will be off, and accompanied by the chirping of the buzzer, the VFD mark Prot will be lit, and the emergence of "OVER CURR" alarm

The operation to set the OCP point:

1. Press (Shift) + I-set (Menu) button to menu.
2. Press △、▽ to overturn to **OCP SET**, press Enter button to confirm.
3. Press △、▽ to select **ON**, press Enter to confirm.
4. Set OCP point by pressing numeric keys, then press Enter. At last, press Esc to escape.

NOTE

The IT6722A power supply has no OCP function.

Over temperature protection(OTP)

When internal power device is higher than about 85 °C, the power is under temperature protection. At this time, the power will automatically be OFF and VFD will display OTP.

3.11 Key Lock function

Press (Shift)+ On/Off (Lock)button to set the key lock state. If keyboard has been locked, the indicator light **Lock** will display on the VFD screen. In addition, when key board are lock, all buttons can’t be used but ON/OFF, Meter button, shift button. Press this button once again will relieve key lock function.

3.12 Remote sense function

Remote sense can adjusted at the output voltage of the device under test, this feature allows to compensate the voltage drop on the wire between the front panel terminals of the power supply and the device under test.

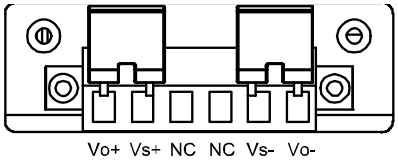

Vo+, Vo- : output terminals, the same with front panel output terminals;

Vs+, Vs- : remote sense pins.

NC, NC : No conjunction.

Use local sense：

Local sense doesn't compensate the voltage drop on the connection wire, the operation is:

1. Use the short clips on the back panel of the instrument, or install wire between Vo+ and Vs+ 、Vo- and Vs-.
2. Connect the positive and negative terminals of the front panel to the device under test.

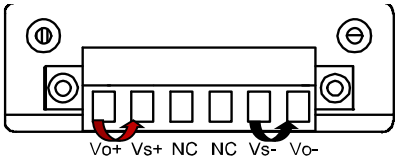

Use remote sense:

Disconnect the wires between "+,-"pins if you want to use remote sense function. Then lead a wire from S+,S- pins and connect to the under test objects.

1. Disconnect the wires/short clips between Vo+ and Vs+、 Vo- and Vs-.
2. Connect wires from Vs+ 、Vs- to the device under test.
3. Connect wires from Vo+ 、Vo- to the device under test.

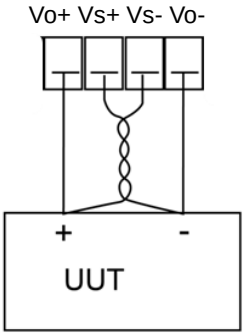

NOTE

In order to ensure the stability of the system, using armored twisted pair cable between the remote sense terminal of IT6700 and load.

Please note that the positive and negative polarity when wiring, otherwise it will damage the instrument!

Chapter IV Technical Specification

This chapter will introduce the main technical parameters of IT6700, such as rated voltage/current/power and so on. Besides, we will introduce the working environment and storage temperature.

4.1 Main technical parameters

Parameters		IT6722	IT6722A
Rated values (0 °C-40 °C)	voltage	0~80V	
	current	0~20A	
	power	400W	
Load regulation ±(%of Output+Offset) (change from 10% to 90% of full load)	voltage	≤0.03%+10mV	
	current	≤0.1%+5mA	
Line regulation ±(%of Output+Offset) (change from 198-242VAC input)	voltage	≤0.01%+5mV	
	current	≤0.1%+5mA	
Setup resolution	voltage	10mV	
	current	10mA	
Readback resolution	voltage	10mV	
	current	10mA	
Setup accuracy (one year 、25°C±5°C) ±(%of Output+Offset)	voltage	≤0.01%+20mV	
	current	≤0.1%+10mA	
Readback accuracy (one year 、25°C±5°C) ±(%of Output+Offset)	voltage	≤0.01%+20mV	
	current	≤0.1%+20mA	
Ripple (20Hz -20MHz)	voltage	≤50mVp-p	
	current	≤15mArms	
Setup Temp.coefficient (%Output/°C+Offset)	voltage	0.02%+10mV	
	current	0.03%+10mA	
Readback Temp.coefficient (%Output/°C+Offset)	voltage	0.02%+10mV	
	current	0.03%+10mA	
Rise time(No-load)	voltage	≤300mS	
Rise time(Full-load)	voltage	≤1S	
Fall time(No-load)	voltage	≤500mS	
Fall time(Full-load)	voltage	≤300mS	
Transient Response Time	≤5mS		
AC Input	voltage1	220V±10%	
	voltage2	/	
	Frequency	47Hz~63Hz	
Setup stability-30min (%of Output +Offset)	voltage	0.01%+20mV	
	current	0.1%+30mA	
Setup stability-8h	voltage	0.01%+20mV	

(%of Output +Offset)	current	0.1%+30mA
Readback stability-30min (%of Output +Offset)	voltage	0.01%+20mV
	current	0.1%+30mA
Readback stability-8h (%of Output +Offset)	voltage	0.01%+20mV
	current	0.1%+30mA
Efficiency	80%(Typical)	
Fuse specification	5A	
Remote Sense Compensation	1V	
Command Response Time	10-600mS	
Power Factor	99%(Typical)	
Maximum input current	3A	
Maximum input apparent power	500VA	
Storage temperature	-10℃~70℃	
Protective function	OVP/OCP/OTP	OVP/OTP
standard Interface	USB/RS232/GPIB	USB/RS232
Isolation (output to ground)	500V	
Working temperature	0~40℃	
Dimension(mm)	214.5mmW×88.2mmH×445mmD	
Weight(net)	4Kg	

Parameters		IT6723	IT6724
Rated values (0 °C-40 °C)	voltage	0~80V	
	current	0~40A	
	power	850W	1500W
Load regulation ±(%of Output+Offset) (change from 10% to 90% of full load)	voltage	≤0.03%+70mV	
	current	≤0.1%+10mA	
Line regulation ±(%of Output+Offset) (change from 198-242VAC input)	voltage	≤0.01%+10mV	
	current	≤0.1%+10mA	
Setup resolution	voltage	10mV	
	current	10mA	
Readback resolution	voltage	10mV	
	current	10mA	
Setup accuracy (one year 、25°C±5°C) ±(%of Output+Offset)	voltage	≤0.03%+20mV	
	current	≤0.1%+40mA	
Readback accuracy (one year 、25°C±5°C) ±(%of Output+Offset)	voltage	≤0.03%+20mV	
	current	≤0.1%+40mA	
Ripple (20Hz -20MHz)	voltage	≤100mVp-p	
	current	≤50mArms	
Setup Temp.coefficient (%Output/°C+Offset)	voltage	0.02%+10mV	
	current	0.03%+20mA	
Readback	voltage	0.01%+10mV	

Temp.coefficient (%Output/°C+Offset)	current	0.03%+20mA	
Rise time(No-load)	voltage	≤300mS	
Rise time(Full-load)	voltage	≤500mS	
Fall time(No-load)	voltage	≤5S	
Fall time(Full-load)	voltage	≤150mS	
Transient Response Time	≤500uS		
AC Input	voltage1	110V±10%	220V±10%
	voltage2	220V±10%	/
	Frequency	47HZ-63HZ	
Setup stability-30min (%of Output +Offset)	voltage	0.03%+20mV	
	current	0.1%+40mA	
Setup stability-8h (%of Output +Offset)	voltage	0.03%+20mV	
	current	0.1%+40mA	
Readback stability-30min (%of Output +Offset)	voltage	0.03%+20mV	
	current	0.1%+40mA	
Readback stability-8h (%of Output +Offset)	voltage	0.03%+20mV	
	current	0.1%+40mA	
Efficiency	84%		88%
Fuse specification	15A		
Remote Sense Compensation	1V		
Command Response Time	10-600mS		
Power Factor	0.98		
Maximum input current	10A		
Maximum input apparent power	1100VA		2000VA
Storage temperature	-10℃~70℃		
Protective function	OVP/OCP/OTP		
standard Interface	USB/RS232		
Isolation (output to ground)	500V		
Working temperature	0~40℃		
Dimension(mm)	214.5mmW×88.2mmH×445mmD		
Weight(net)	6Kg		

Parameters		IT6723B	IT6724B
Rated values (0 °C-40 °C)	voltage	0~150V	
	current	0~20A	
	power	850W	1500W
Load regulation ±(%of Output+Offset) (change from 10% to 90% of full load)	voltage	≤0.03%+100mV	
	current	≤0.1%+10mA	
Line regulation ±(%of Output+Offset) (change from 198-242VAC input)	voltage	≤0.01%+30mV	
	current	≤0.1%+10mA	
Setup resolution	voltage	100mV	
	current	10mA	

Readback resolution	voltage	100mV	
	current	10mA	
Setup accuracy (one year 、25°C±5°C) ±(%of Output+Offset)	voltage	≤0.03%+100mV	0.03%+100mV
	current	≤0.1%+20mA	0.1%+20mA
Readback accuracy (one year 、25°C±5°C) ±(%of Output+Offset)	voltage	≤0.03%+200mV	0.03%+200mV
	current	≤0.1%+20mA	0.1%+20mA
Ripple (20Hz -20MHz)	voltage	≤150mVp-p	
	current	≤30mArms	
Setup Temp.coefficient (%Output/°C+Offset)	voltage	0.02%+100mV	0.02%+100mV
	current	0.03%+20mA	0.03%+20mA
Readback Temp.coefficient (%Output/°C+Offset)	voltage	0.02%+100mV	0.02%+100mV
	current	0.03%+20mA	0.03%+20mA
Rise time(No-load)	voltage	≤300mS	
Rise time(Full-load)	voltage	≤1S	
Fall time(No-load)	voltage	≤5S	
Fall time(Full-load)	voltage	≤200mS	
Transient Response Time	≤500uS		
AC Input	voltage1	110V±10%	220V±10%
	voltage2	220V±10%	/
	Frequency	47HZ-63HZ	
Setup stability-30min (%of Output +Offset)	voltage	0.03%+75mV	
	current	0.1%+20mA	
Setup stability-8h (%of Output +Offset)	voltage	0.03%+75mV	
	current	0.1%+20mA	
Readback stability-30min (%of Output +Offset)	voltage	0.03%+75mV	
	current	0.1%+20mA	
Readback stability-8h (%of Output +Offset)	voltage	0.03%+75mV	
	current	0.1%+20mA	
Efficiency	84%		88%
Fuse specification	15A		
Remote Sense Compensation	1V		
Command Response Time	10-600mS		
Power Factor	0.98(Typical)		
Maximum input current	10A		
Maximum input apparent power	1100VA		2000VA
Storage temperature	-10℃~70℃		
Protective function	OVP/OCP/OTP		
standard Interface	USB/RS232		
Isolation (output to ground)	500V		
Working temperature	0~40℃		
Dimension(mm)	214.5mmW×88.2mmH×445mmD		
Weight(net)	6Kg		

Copyright © Itech Electronic Co., Ltd.

Parameters		IT6723C	IT6724C
Rated values (0 °C-40 °C)	voltage	0~32V	
	current	0~110A	
	power	850W	1500W
Load regulation ±(%of Output+Offset)	voltage	≤0.03%+30mV	
	current	≤0.1%+10mA	
Line regulation ±(%of Output+Offset)	voltage	≤0.01%+5mV	
	current	≤0.1%+10mA	
Setup resolution	voltage	10mV	
	current	10mA	
Readback resolution	voltage	10mV	
	current	10mA	
Setup accuracy (one year 、25°C±5°C) ±(%of Output+Offset)	voltage	≤0.03%+10mV	
	current	≤0.1%+60mA	
Readback accuracy (one year 、25°C±5°C) ±(%of Output+Offset)	voltage	≤0.03%+20mV	
	current	≤0.1%+60mA	
Ripple (20Hz -20MHz)	voltage	≤100mVp-p	
	current	≤150mArms	
Setup Temp.coefficient (%Output/°C+Offset)	voltage	0.02%+10mV	
	current	0.03%+10mA	
Readback Temp.coefficient (%Output/°C+Offset)	voltage	0.02%+10mV	
	current	0.03%+10mA	
Rise time(No-load)	voltage	≤300mS	
Rise time(Full-load)	voltage	≤500mS	
Fall time(No-load)	voltage	≤5S	
Fall time(Full-load)	voltage	≤150mS	
Transient Response Time	≤500uS		
AC Input	voltage1	110V±10%	220V±10%
	voltage2	220V±10%	/
	Frequency	47HZ-63HZ	
Setup stability-30min (%of Output +Offset)	voltage	0.03%+10mV	
	current	0.1%+60mA	
Setup stability-8h (%of Output +Offset)	voltage	0.03%+10mV	
	current	0.1%+60mA	
Readback stability-30min (%of Output +Offset)	voltage	0.03%+10mV	
	current	0.1%+60mA	
Readback stability-8h (%of Output +Offset)	voltage	0.03%+10mV	
	current	0.1%+60mA	
Efficiency	84%		88%
Fuse specification	15A		
Remote Sense Compensation	1V		
Command Response Time	10-600mS		
Power Factor	0.98		
Maximum input current	10A		

Copyright © Itech Electronic Co., Ltd.

Maximum input apparent power	1100VA	2000VA
Storage temperature	-10℃~70℃	
Protective function	OVP/OCP/OTP	
standard Interface	USB/RS232	
Isolation (output to ground)	500V	
Working temperature	0~40℃	
Dimension(mm)	214.5mmW×88.2mmH×445mmD	
Weight(net)	6Kg	

Parameters		IT6723G	IT6724G
Rated values (0 °C-40 °C)	voltage	0~600V	
	current	0~5A	
	power	850W	1500W
Load regulation ±(%of Output+Offset) (change from 10% to 90% of full load)	voltage	≤0.04%+300mV	
	current	≤0.1%+10mA	
Line regulation ±(%of Output+Offset) (change from 198-242VAC input)	voltage	≤0.01%+50mV	
	current	≤0.1%+10mA	
Setup resolution	voltage	100mV	
	current	10mA	
Readback resolution	voltage	100mV	
	current	10mA	
Setup accuracy (one year 、25°C±5°C) ±(%of Output+Offset)	voltage	≤0.05%+400mV	
	current	≤0.1%+20mA	
Readback accuracy (one year 、25°C±5°C) ±(%of Output+Offset)	voltage	≤0.03%+200mV	
	current	≤0.1%+20mA	
Ripple (20Hz -20MHz)	voltage	≤600mVp-p	
	current	≤30mArms	
Setup Temp.coefficient (%Output/°C+Offset)	voltage	0.02%+100mV	
	current	0.03%+10mA	
Readback Temp.coefficient (%Output/°C+Offset)	voltage	0.02%+100mV	
	current	0.03%+10mA	
Rise time(No-load)	voltage	≤300mS	
Rise time(Full-load)	voltage	≤1S	
Fall time(No-load)	voltage	≤5S	
Fall time(Full-load)	voltage	≤200mS	
Transient Response Time	≤500uS		
AC Input	voltage1	110V±10%	220V±10%
	voltage2	220V±10%	/
	Frequency	47HZ-63HZ	
Setup stability-30min (%of Output +Offset)	voltage	0.03%+200mV	
	current	0.1%+20mA	
Setup stability-8h	voltage	0.03%+200mV	

(%of Output +Offset)	current	0.1%+20mA	
Readback stability-30min (%of Output +Offset)	voltage	0.03%+200mV	
	current	0.1%+20mA	
Readback stability-8h (%of Output +Offset)	voltage	0.03%+200mV	
	current	0.1%+20mA	
Efficiency	84%		88%
Fuse specification	15A		
Remote Sense Compensation	1V		
Command Response Time	10-600mS		
Power Factor	0.98		
Maximum input current	10A		
Maximum input apparent power	1100VA		2000VA
Storage temperature	-10℃~70℃		
Protective function	OVP/OCP/OTP		
standard Interface	USB/RS232		
Isolation (output to ground)	600V		
Working temperature	0~40℃		
Dimension(mm)	214.5mmW×88.2mmH×445mmD		
Weight(net)	6Kg		

Parameters		IT6723H	IT6724H
Rated values (0 °C-40 °C)	voltage	0~300V	
	current	0~10A	
	power	850W	1500W
Load regulation ±(%of Output+Offset) (change from 10% to 90% of full load)	voltage	≤0.01%+100mV	
	current	≤0.1%+10mA	
Line regulation ±(%of Output+Offset) (change from 198-242VAC input)	voltage	≤0.01%+50mV	
	current	≤0.1%+10mA	
Setup resolution	voltage	100mV	
	current	10mA	
Readback resolution	voltage	100mV	
	current	10mA	
Setup accuracy (one year 、25°C±5°C) ±(%of Output+Offset)	voltage	≤0.03%+200mV	
	current	≤0.1%+20mA	
Readback accuracy (one year 、25°C±5°C) ±(%of Output+Offset)	voltage	≤0.03%+200mV	
	current	≤0.1%+20mA	
Ripple (20Hz -20MHz)	voltage	≤250mVp-p	
	current	≤40mArms	
Setup Temp.coefficient (%Output/°C+Offset)	voltage	0.02%+100mV	
	current	0.03%+20mA	
Readback	voltage	0.02%+100mV	

Temp.coefficient (%Output/°C+Offset)	current	0.03%+20mA	
Rise time(No-load)	voltage	≤300mS	
Rise time(Full-load)	voltage	≤1S	
Fall time(No-load)	voltage	≤5S	
Fall time(Full-load)	voltage	≤150mS	
Transient Response Time	≤500uS		
AC Input	voltage1	110V±10%	220V±10%
	voltage2	220V±10%	/
	Frequency	47HZ-63HZ	
Setup stability-30min (%of Output +Offset)	voltage	0.03%+150mV	
	current	0.1%+20mA	
Setup stability-8h (%of Output +Offset)	voltage	0.03%+150mV	
	current	0.1%+20mA	
Readback stability-30min (%of Output +Offset)	voltage	0.03%+150mV	
	current	0.1%+20mA	
Readback stability-8h (%of Output +Offset)	voltage	0.03%+150mV	
	current	0.1%+20mA	
Efficiency	84%		88%
Fuse specification	15A		
Remote Sense Compensation	1V		
Command Response Time	10-600mS		
Power Factor	0.98		
Maximum input current	10A		
Maximum input apparent power	1100VA		2000VA
Storage temperature	-10℃~70℃		
Protective function	OVP/OCP/OTP		
standard Interface	USB/RS232		
Isolation (output to ground)	500V		
Working temperature	0~40℃		
Dimension(mm)	214.5mmW×88.2mmH×445mmD		
Weight(net)	6Kg		

Parameters		IT6726C
Rated values (0 °C-40 °C)	voltage	0~32V
	current	0~220A
	power	3000W
Load regulation ±(%of Output+Offset) (change from 10% to 90% of full load)	voltage	≤0.01%+50mV
	current	≤0.1%+30mA
Line regulation ±(%of Output+Offset) (change from 198-242VAC input)	voltage	≤0.01%+50mV
	current	≤0.1%+10mA
Setup resolution	voltage	10mV
	current	10mA

Readback resolution	voltage	10mV
	current	10mA
Setup accuracy (one year 、25°C±5°C) ±(%of Output+Offset)	voltage	≤0.03%+30mV
	current	≤0.2%+100mA
Readback accuracy (one year 、25°C±5°C) ±(%of Output+Offset)	voltage	≤0.03%+30mV
	current	≤0.2%+100mA
Ripple (20Hz -20MHz)	voltage	≤200mVp-p
	current	≤320mArms
Setup Temp.coefficient (%Output/°C+Offset)	voltage	0.02%+10mV
	current	0.03%+20mA
Readback Temp.coefficient (%Output/°C+Offset)	voltage	0.02%+10mV
	current	0.03%+20mA
Rise time(No-load)	voltage	≤500mS
Rise time(Full-load)	voltage	≤500mS
Fall time(No-load)	voltage	≤5S
Fall time(Full-load)	voltage	≤400mS
Transient Response Time	≤500uS	
AC Input	voltage1	220V±10%
	voltage2	/
	Frequency	47HZ-63HZ
Setup stability-30min (%of Output +Offset)	voltage	0.03%+30mV
	current	0.2%+60mA
Setup stability-8h (%of Output +Offset)	voltage	0.03%+30mV
	current	0.2%+60mA
Readback stability-30min (%of Output +Offset)	voltage	0.03%+30mV
	current	0.2%+60mA
Readback stability-8h (%of Output +Offset)	voltage	0.03%+30mV
	current	0.2%+60mA
Efficiency	88%	
Fuse specification	20A	
Remote Sense Compensation	1V	
Command Response Time	10-600mS	
Power Factor	0.98	
Maximum input current	18A	
Maximum input apparent power	3700VA	
Storage temperature	-10℃~70℃	
Protective function	OVP/OCP/OTP	
standard Interface	USB/RS232/RS485	
Isolation (output to ground)	500V	
Working temperature	0~40℃	
Dimension(mm)	482.5mmW×88.2mmH×548.9mmD	
Weight(net)	16Kg	

Parameters		IT6726V
Rated values (0 °C-40 °C)	voltage	0~1200V
	current	0~5A
	power	3000W
Load regulation ±(%of Output+Offset) (change from 10% to 90% of full load)	voltage	≤0.04%+500mV
	current	≤0.1%+20mA
Line regulation ±(%of Output+Offset) (change from 198-242VAC input)	voltage	≤0.01%+100mV
	current	≤0.1%+20mA
Setup resolution	voltage	100mV
	current	10mA
Readback resolution	voltage	100mV
	current	10mA
Setup accuracy (one year 、25°C±5°C) ±(%of Output+Offset)	voltage	≤0.04%+400mV
	current	≤0.1%+20mA
Readback accuracy (one year 、25°C±5°C) ±(%of Output+Offset)	voltage	≤0.04%+400mV
	current	≤0.1%+20mA
Ripple (20Hz -20MHz)	voltage	≤600mVp-p
	current	≤50mArms
Setup Temp.coefficient (%Output/°C+Offset)	voltage	0.02%+100mV
	current	0.03%+10mA
Readback Temp.coefficient (%Output/°C+Offset)	voltage	0.02%+100mV
	current	0.03%+10mA
Rise time(No-load)	voltage	≤500mS
Rise time(Full-load)	voltage	≤2S
Fall time(No-load)	voltage	≤10S
Fall time(Full-load)	voltage	≤400mS
Transient Response Time	≤500uS	
AC Input	voltage1	220V±10%
	voltage2	/
	Frequency	47HZ-63HZ
Setup stability-30min (%of Output +Offset)	voltage	0.04%+200mV
	current	0.1%+20mA
Setup stability-8h (%of Output +Offset)	voltage	0.04%+200mV
	current	0.1%+20mA
Readback stability-30min (%of Output +Offset)	voltage	0.04%+200mV
	current	0.1%+20mA
Readback stability-8h (%of Output +Offset)	voltage	0.04%+200mV
	current	0.1%+20mA
Efficiency	88%	
Fuse specification	20A	
Remote Sense Compensation	1V	
Command	10-600mS	

Copyright © Itech Electronic Co., Ltd.

Response Time	
Power Factor	**0.98**
Maximum input current	**18A**
Maximum input apparent power	**3700VA**
Storage temperature	**-10℃~70℃**
Protective function	**OVP/OCP/OTP**
standard Interface	**USB/RS232**
Isolation (output to ground)	**1200V**
Working temperature	**0~40℃**
Dimension(mm)	**482.5mmW×88.2mmH×548.9mmD**
Weight(net)	**16Kg**

NOTE

*1 The above specifications may be subject to change without prior notice.

*2 All the above specifications are given for the rear panel terminal output conditions.

Chapter V Remote Operation Mode

IT6700 series power supply is provided with three communication interfaces to communicate with a computer for selection, including RS232, USB, and RS485. The communication interfaces of different models of series IT6700 are different. Please refer to the corresponding specifications for detailed information.

5.1 RS232 interface

There is a DB9 connector at the rear of the power supply, when connect to computer, you need to select a cable with COM port on both side; to active communication, you need to enable the settings in menu to be the same with the PC communication configuration.

NOTE

The RS232 settings must match the settings in front panel system information. If any change, please press (Shift) + I-set key to modify the menu: SYST SET\COMM.

RS-232 data format

RS-232 data is a 10-bit words which has a start bit and a stop bit. The start bit and stop bit can't be edited. However, you can select the parity items with (Shift) + I-set key on the front panel.

Parity options are stored in nonvolatile memory.

Baud Rate

The front panel (Shift) + I-set button allows the user to select a baud rate which is stored in the non-volatile memory: 4800/9600/19200/38400/57600/115200.

RS-232 connection

Use a RS232 cable with DB-9 interface, RS-232 serial port can connect with the controller (eg PC). Do not use blank Modem cable. Below Table shows the plug pins.

If your computer is using a RS-232 interface with DB-25 connector, you need an adapter cable with a DB-25 connector at one end and the other side is a DB-9(not blank modem cable).

RS232 Pins of Plug

Base pin number	Description
1	No conjunction
2	TXD, data transmission
3	RXD, data receiving
4	No conjunction
5	GND, grounding
6	No conjunction
7	CTS, clear to send
8	RTS, request to send
9	No conjunction

RS-232 Troubleshooting:

If there is RS-232 connection problem, check the following:

- Computer and power supply must configure the same baud rate, parity, data bits and flow control options. Note that the power configuration as a start bit and a stop bit (these values are fixed).
- As described before in RS-232 connector, you must use the correct interface cable or adapter. Note that even if the cable has the right plug, the internal wiring may be wrong.
- Interface cable must be connected to the correct serial port on the computer (COM1, COM2, etc.).

Communication Settings

Before communication, you should first make the following parameters of power supply and PC matches.

Baud Rate: 9600 (4800/9600/19200/38400/57600/115200). You can enter the system menu from the front panel, and then set the baud rate.

Data bits: 8

Stop Bits: 1

calibration (none, even, odd)

EVEN 8 data bits, have even parity

ODD 8 data bits have odd parity

NONE 8 data bits, no parity

Local Address: (0 ~ 31, the factory default setting is 0)

Parity=None	Start Bit	8 Data Bits	Stop Bit

5.2 USB interface

Use a Cable with two USB port to connect the power and the computer. All power functions can be programmed via USB.

The USB488 interface functions of the power supply described as below:

- Interface is 488.2 USB488 interface.
- Interface Receiver REN_CONTROL, GO_TO_LOCAL, and LOCAL_LOCKOUT request.
- Interface Receive MsgID = TRIGGER USBTMC order information, and will pass TRIGGER order to the functional layer.

Power USB488 device functions described as follows:

- Devices can read all of the mandatory SCPI orders.
- Device is SR1 enabled.
- Device is RL1 enabled.
- Device is DT1 enabled.

5.3 RS485 interface

IT6726C power supply, via the RS485 interface, provides multi-unit control function for up to 30 units (If connecting more than 10 units, add a 120Ω resistor terminator to the last unit as shown in the figure below). Access the menu tree Menu → SYST SET → COMM → RS485 to set the RS485 settings.

User can set the following parameters of the RS485 interface:

Baud Rate: 9600(4800/9600/19200/38400/57600/115200)

Parity and data bit: NONE/8BIT、EVEN/8BIT、ODD/8BIT

MODE：SIGNAL、MUX

SIGNAL(single-unit mode)

MUX(multi-unit mode),ADDR(Address),(0～30,the factory default setting is 0)

Start Bit	8 Data Bits	Parity=None	Stop Bit

To set the multi-unit connection mode, access the menu tree MENU →SYST SET → COMM → RS485 → MODE → MUX to choose the multi-unit mode.

Set each unit with a different Address (0 ~ 30). Then by using RS485 connect the first power supply in the chain to a PC. Now, multiple units daisy-chained via RS485 can be controlled by one PC by using the commands specific for multi-unit connection. See “Programming Guide” section for details. The following diagram shows how to connect the power supply by using RS485.

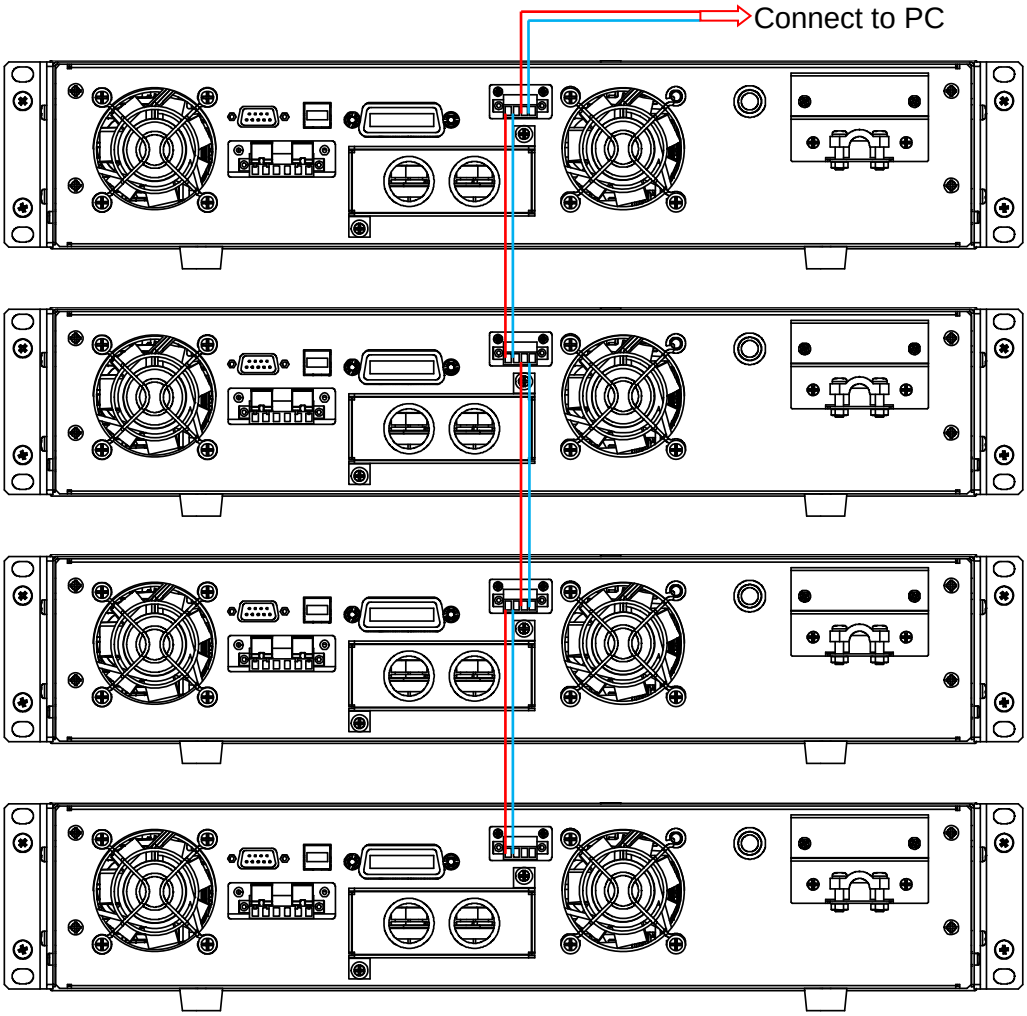

5.4 GPIB interface (Only for IT6700(G) series)

First, Connect the GPIB interface on the power supply and the GPIB card on computer via IEEE488 bus, must be full access and tighten the screws. Then set the address, the address range of the power : 0 to 30, can set by the function key on the front panel, press the (Shift)+ I-set key to enter the

system menu function, find the GPIB address setting by ▼ button, type the address, Enter key to confirm. GPIB address is stored in nonvolatile memory line.

Appendix

Specifications of Red and Black Test Lines

ITECH provides you with optional red and black test lines, which individual sales and you can select for test. For specifications of ITECH test lines and maximum current values, refer to the table below.

Model	Specification	Cross section	Length
IT-E301/10A	10A	-	1m
IT-E301/30A	30A	6mm^2	1.2m
IT-E301/30A	30A	6mm^2	2m
IT-E301/60A	60A	20mm^2	1.5m
IT-E301/120A	120A	50mm^2	2m
IT-E301/240A	240A	70mm^2	1m
IT-E301/240A	240A	70mm^2	2m
IT-E301/360A	360A	95mm^2	2m

For maximum current of AWG copper wire, refer to table blow.

AWG	10	12	14	16	18	20	22	24	26	28
The Maximum current value(A)	40	25	20	13	10	7	5	3.5	2.5	1.7

Note: AWG (American Wire Gage), it means X wire (marked on the wire). The table above lists current capacity of single wire at working temperature of 30°C. For reference only.

Contact Us

Thanks for purchasing ITECH products. In case of any doubts, please contact us as follows:

1. Visit ITECH website: www.itechate.com
2. Select the most convenient contact method, for further information.