Programmable DC Power Supply
IT-N6900 Series User Manual

Model: IT-N6900
Version: V2.1

Notices

© Itech Electronic, Co., Ltd. 2025

No part of this manual may be reproduced in any form or by any means (including electronic storage and retrieval or translation into a foreign language) without prior permission and written consent from Itech Electronic, Co., Ltd. as governed by international copyright laws.

Manual Part Number

IT-N6900

Revision

Second Edition: May 14th,

2025

Itech Electronic, Co., Ltd.

Trademarks

Pentium is U.S. registered trademarks of Intel Corporation.

Microsoft, Visual Studio, Windows and MS Windows are registered trademarks of Microsoft Corporation in the United States and/or other countries and regions.

Warranty

The materials contained in this document are provided “as is”, and is subject to change, without prior notice, in future editions. Further, to the maximum extent permitted by applicable laws, ITECH disclaims all warrants, either express or implied, with regard to this manual and any information contained herein, including but not limited to the implied warranties of merchantability and fitness for a particular purpose. ITECH shall not be held liable for errors or for incidental or indirect damages in connection with the furnishing, use or application of this document or of any information contained herein. Should ITECH and the user enter into a separate written agreement with warranty terms covering the materials in this document that conflict with these terms, the warranty terms in the separate agreement shall prevail.

Technology Licenses

The hardware and/or software described herein are furnished under a license and may be used or copied only in accordance with the terms of such license.

Restricted Rights Legend

Restricted permissions of the U.S. government. Permissions for software and technical data which are authorized to the U.S. Government only include those for custom provision to end users. ITECH follows FAR 12.211 (technical data), 12.212 (computer software). DFARS 252.227-7015 (technical data--commercial products) for national defense and DFARS 227.7202-3 (permissions for commercial computer software or computer software documents) while providing the customized business licenses of software and technical data.

Safety Notices

CAUTION

A CAUTION sign denotes a hazard. It calls attention to an operating procedure or practice that, if not correctly performed or adhered to, could result in damage to the product or loss of important data. Do not proceed beyond a CAUTION sign until the indicated conditions are fully understood and met.

WARNING

A WARNING sign denotes a hazard. It calls attention to an operating procedure or practice that, if not correctly performed or adhered to, could result in personal injury or death. Do not proceed beyond a WARNING sign until the indicated conditions are fully understood and met.

NOTE

A NOTE sign denotes important hint. It calls attention to tips or supplementary information that is essential for users to refer to.

Quality Certification and Assurance

We certify that IT-N6900 series instruments meet all the published specifications at time of shipment from the factory.

Warranty

ITECH warrants that the product will be free from defects in material and workmanship under normal use for a period of one (1) year from the date of delivery (except those described in the Limitation of Warranty below).

For warranty service or repair, the product must be returned to a service center designated by ITECH.

- The product returned to ITECH for warranty service must be shipped PREPAID. And ITECH will pay for return of the product to customer.
- If the product is returned to ITECH for warranty service from overseas, all the freights, duties and other taxes shall be on the account of customer.

Limitation of Warranty

This Warranty will be rendered invalid in case of the following:

- Damage caused by circuit installed by customer or using customer own products or accessories;
- Modified or repaired by customer without authorization;
- Damage caused by circuit installed by customer or not operating our products under designated environment;
- The product model or serial number is altered, deleted, removed or made illegible by customer;
- Damaged as a result of accidents, including but not limited to lightning, moisture, fire, improper use or negligence.

Safety Symbols

⎓	Direct current	▮	ON (power on)
∼	Alternating current	○	OFF (power off)
≂	Both direct and alternating current	⎍	Power-on state
⏚	Protective conductor terminal	⏻	Power-off state
⏚	Earth (ground) terminal	⊥	Reference terminal
⚠	Caution, risk of electric shock	+	Positive terminal

Copyright © Itech Electronic Co., Ltd.

⚠	Warning, risk of danger (refer to this manual for specific Warning or Caution information)	▬	Negative terminal
⏚	Frame or chassis terminal	-	-

Safety Precautions

The following safety precautions must be observed during all phases of operation of this instrument. Failure to comply with these precautions or specific warnings elsewhere in this manual will constitute a default under safety standards of design, manufacture and intended use of the instrument. ITECH assumes no liability for the customer's failure to comply with these precautions.

WARNING

- Do not use the instrument if it is damaged. Before operation, check the casing to see whether it cracks. Do not operate the instrument in the presence of inflammable gasses, vapors or dusts.
- The electronic load is provided with a power line during delivery and should be connected to a socket with a protective earth terminal. Before operation, be sure that the instrument is well grounded.
- Make sure to use the power cord supplied by ITECH.
- Check all marks on the instrument before connecting the instrument to power supply.
- Use electric wires of appropriate load. All loading wires should be capable of bearing maximum short-circuit current of electronic load without overheating. If there are multiple electronic loads, each pair of the power cord must be capable of bearing the full-loaded rated short-circuit output current
- Ensure the voltage fluctuation of mains supply is less than 10% of the working voltage range in order to reduce risks of fire and electric shock.
- If you use the power supply to charge the battery, pay attention to the positive and negative polarity of the battery when wiring, otherwise the power supply will be damaged!
- Do not install alternative parts on the instrument or perform any unauthorized modification.
- Do not use the instrument if the detachable cover is removed or loosen.
- To prevent the possibility of accidental injuries, be sure to use the power adapter supplied by the manufacturer only.
- We do not accept responsibility for any direct or indirect financial damage or loss of profit that might occur when using the instrument.
- This instrument is used for industrial purposes, do not apply this product to IT power supply system.
- Never use the instrument with a life-support system or any other equipment subject to safety requirements.

Copyright © Itech Electronic Co., Ltd.

CAUTION

- Failure to use the instrument as directed by the manufacturer may render its protective features void.
- Always clean the casing with a dry cloth. Do not clean the internals.
- Make sure the vent hole is always unblocked.

Environmental Conditions

The instrument is designed for indoor use and an area with low condensation. The table below shows the general environmental requirements for the instrument.

Environmental Conditions	Requirements
Operating temperature	0°C to 40°C
Operating humidity	20%-80% (non-condensation)
Storage temperature	-10°C to 70 °C
Altitude	Operating up to 2,000 meters
Pollution degree	Pollution degree 2
Installation category	II

Note

To make accurate measurements, allow the instrument to warm up for 30 min before operation.

Regulatory Markings

CE	The CE mark indicates that the product complies with all the relevant European legal directives. The specific year (if any) affixed refers to the year when the design was approved.
UK CA	The UKCA mark indicates that the product complies with all relevant UK legal regulations (if accompanied by a year, it indicates the year the design was approved).
	The instrument complies with the WEEE Directive (2002/96/EC) marking requirement. This affixed product label indicates that you must not discard the electrical/electronic product in domestic household waste.
10	This symbol indicates the time period during which no hazardous or toxic substances are expected to leak or deteriorate during normal use. The expected service life of the product is 10 years. The product can be used safely during the 10-year Environment Friendly Use Period (EFUP). Upon expiration of the EFUP, the product must be immediately recycled.

Copyright © Itech Electronic Co., Ltd.

Waste Electrical and Electronic Equipment (WEEE) Directive

This product complies with the WEEE Directive (2002/96/EC) marking requirement. This affix product label indicates that you must not discard the electrical/electronic product in domestic household waste.
Product Category
With reference to the equipment classifications described in the Annex I of the WEEE Directive, this instrument is classified as a “Monitoring and Control Instrument”.
To return this unwanted instrument, contact your nearest ITECH office.

Copyright © Itech Electronic Co., Ltd.

Compliance Information

Complies with the essential requirements of the following applicable European Directives, and carries the CE marking accordingly:

- Electromagnetic Compatibility (EMC) Directive 2014/30/EU
- Low-Voltage Directive (Safety) 2014/35/EU

Conforms with the following product standards:

EMC Standard

IEC 61326-1:2012/ EN 61326-1:2013 [1][2][3]

Reference Standards

CISPR 11:2015+A1:2016 Ed 6.1
IEC 61000-3-2: 2018 RLV
IEC 61000-3-3: 2013+A1:2017
IEC 61000-4-2:2008
IEC 61000-4-3 2006+A1:2007+A2:2010/ EN 61000-4-3 A1:2008+A2:2010
IEC 61000-4-4:2012
IEC 61000-4-5:2014+A1:2017
IEC 61000-4-6:2013+cor1:2015
IEC 61000-4-11:2004+A1:2017

1. The product is intended for use in non-residential/non-domestic environments. Use of the product in residential/domestic environments may cause electromagnetic interference.
2. Connection of the instrument to a test object may produce radiations beyond the specified limit.
3. Use high-performance shielded interface cable to ensure conformity with the EMC standards listed above.

Safety Standard

IEC 61010-1:2010+A1:2016

Contents

Quality Certification and Assurance I
Warranty I
Limitation of Warranty I
Safety Symbols I
Safety Precautions II
Environmental Conditions III
Regulatory Markings III
Waste Electrical and Electronic Equipment (WEEE) Directive IV
Compliance Information V

Chapter1 Inspection and Installation 1

1.1 Verifying the Shipment 1
1.2 Instrument Size Introduction 1
1.3 Adjustment of Power Handle 3
1.4 Mounting Brackets 4
1.5 Connecting the Power Cord 5
1.6 Connecting the DUT 6
1.7 Options Introduction 7

Chapter2 Quick Reference 10

2.1 Brief Introduction 10
2.2 Front-Panel Overview 11
2.3 Keyboard Introduction 12
2.4 Status Bar Indicator Description 13
2.5 Rear Panel Introduction 13
2.6 Introduction of Side Air Holes 14
2.7 Power-on Selftest 15

Chapter3 Function and Features 17

3.1 Switching of Local/Remote Operation Modes 17
3.2 Output On/Off Operation 17
3.3 Power State CC/CV Switching 17
3.4 Meter Interface 18
3.5 Recorder Interface 19
3.6 System Interface 20
3.7 Config Interface 22
3.8 List Interface 23
3.9 Factory Interface 26
3.10 Save/Recall Operation 26
3.11 Protect Interface 28
3.12 Trigger Function 30
3.13 Inner Load Switch Settings 31
3.14 Keyboard Lock Function 32
3.15 Rear Panel Terminal Functions 32
3.16 External Analog Function (State) (optional) 32

Chapter4 Remote Control 37

4.1 USB Interface 37
4.2 GPIB Interface (optional) 37
4.3 LAN Interface 38
4.4 RS-232 Interface (optional) 40

Chapter5 Technical Specification 43

5.1 Main Technical Parameters 43
5.2 Supplemental Characteristics 58

Appendix 59

Copyright © Itech Electronic Co., Ltd.

Chapter1 Inspection and Installation

The power supply is a device with a high safety rating and has a protective earth terminal. Before installation or operation, please check and read the safety signs and instructions in this manual.

1.1 Verifying the Shipment

Unpack the box and check the contents before operating the instrument. If wrong items have been delivered, if items are missing, or if there is a defect with the appearance of the items, please contact the ITECH authorized dealer or after-sales service department immediately.

The package contents include:

Item	Qty.	Model	Remarks
Programmable DC Power Supply	x1	IT-N6900 Series	IT-N6900 Series include: IT-N6952, IT-N6962, IT-N6953, IT-N6963
Power cord	x1	IT-E171/ IT-E172/ IT-E173/ IT-E174	Users can choose different power cords according to the specifications of power sockets in the region. For detailed specifications, please refer to 1.5 Installing Power Cords.
USB communication cable	x1	-	This accessory is selected when the USB interface is used for starting up remote operation.
Calibration Certificate	x1	-	It contains the calibration certificate of the instrument before delivery.

Note

After confirming that the package contents are consistent and there is no problem, please keep the packing box and related contents properly. When the instrument is returned to the factory for service, it needs to meet the packing requirements.

1.2 Instrument Size Introduction

The instrument should be installed at well-ventilated and rational-sized space. Please select appropriate space for installation based on the instrument size.

Copyright © Itech Electronic Co., Ltd.

IT-N6952 / IT-N6962 / IT-N6953 / IT-N6963 models

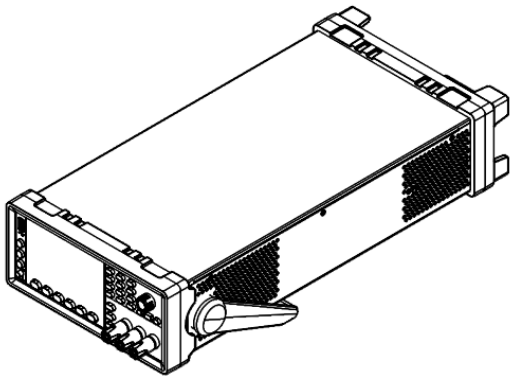

Detailed Dimension Drawing

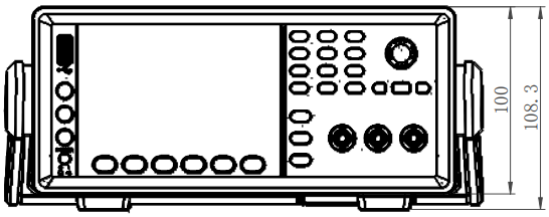

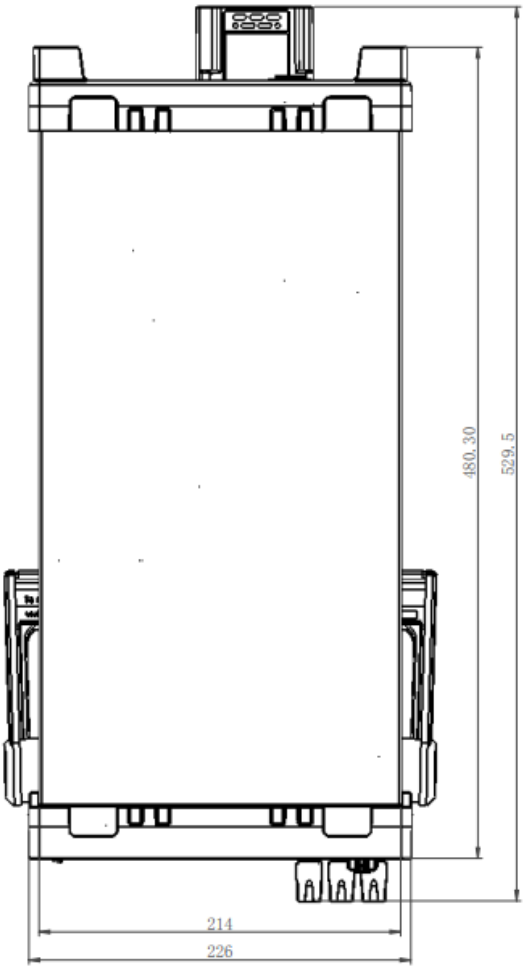

Copyright © Itech Electronic Co., Ltd.

1.3 Adjustment of Power Handle

The power handle can be adjusted to three common state positions as shown in the figure below. Note that when adjusting the handle, it should be adjusted to the corresponding position with moderate force.

Note: The following picture is used to demonstrate the position of the handle**, the actual appearance should be subject to the actual product.**

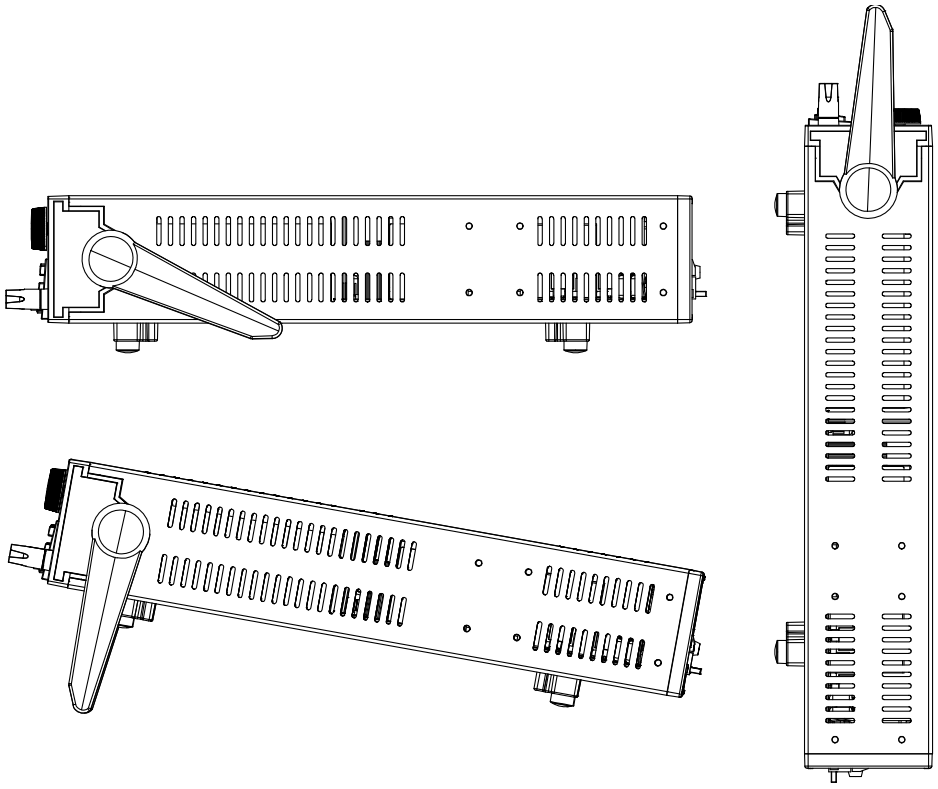

If the handle is not required, the handle can be removed, the method of removal is:
Adjust the handle to the position as shown in the figure below, and then pull it to the sides with both hands.

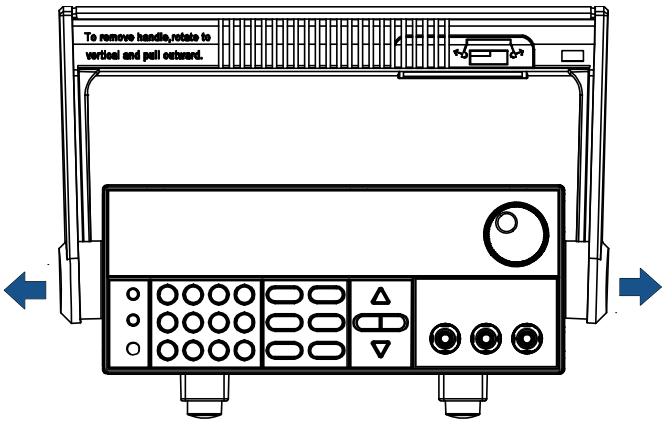

Note

When installing and removing the power handle, don't use too much force to avoid pinching your hand.

1.4 Mounting Brackets

IT-N6900 series power supplies can be installed on standard 19-inch brackets. ITECH has prepared the IT-E158 bracket as a mounting kit for users. Users can select the corresponding bracket manual for installation according to the specific bracket model purchased.

Before installing the IT-N6900 series power supply on the rack, please remove the rubber shock absorber and handle at the front of the instrument, and the rubber shock absorber at the rear of the instrument.

WARNING

Do not block the air intake holes on the front half of the sides of the instrument and the rear half of the sides and the exhaust holes on the rear panel.

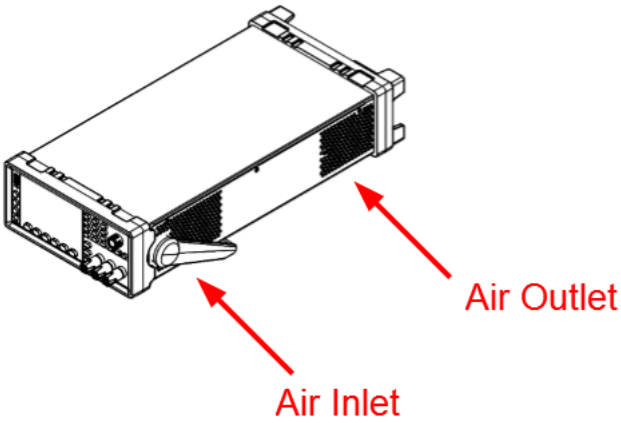

Remove the Shock Absorber

Tighten one corner of the rubber shock and slide it out.

Remove the Handle

1. Grasp the edge of the handle and pull it outward. This will rotate it.
2. Turn the handle to the vertical position and lower the instrument horizontally.
3. Pull the handle outwards, then lift up.

Copyright © Itech Electronic Co., Ltd.

CAUTION

To replace the handle, pay attention to its orientation. It will be damaged if placed in the wrong direction

Rack Installation

When installing multiple standalone units into a rack, it is recommended to leave a space of 1U to 2U between units to ensure adequate ventilation and heat dissipation, as shown in the diagram below.

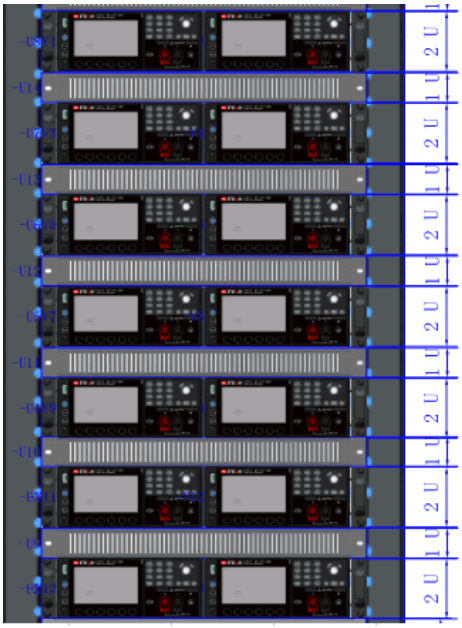

1.5 Connecting the Power Cord

Connect power cord of standard accessories and ensure that the power supply is under normal power supply.

AC Power Input Level

The AC input on the rear of the instrument is a general AC input. It accepts nominal line voltages in the range of 100 VAC to 240 VAC. 50 Hz or 60 Hz required.

Note: The 1500W model requires an AC input voltage of 220VAC ±10% at full power output. Other nominal input voltage ranges have an output power derating of 850W.

Categories of Power Lines

Select from the flowing schedule of power cord specifications an appropriate power cord that matches the voltage for the area in which you use the instrument. If the power cord included in the instrument you purchased doesn't match the voltage, contact the dealer or manufacturer for change..

Copyright © Itech Electronic Co., Ltd.

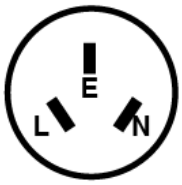

China

IT-E171

United States & Canada & Japan

IT-E172

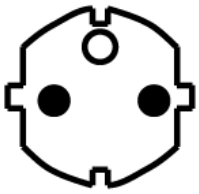

Europe

IT-E173

England

IT-E174

1.6 Connecting the DUT

WARNING

- **Before connecting DUT, be sure to switch off the instrument.**
- **If the DUT is a battery, do not short-circuit the battery. Shorted battery can cause serious injury.**
- **It is recommended to connect a fuse in series between the power supply and the battery when testing the battery to prevent short circuit caused by any case.**
- **Before connecting the test lines, please confirm the maximum current that the test lines can withstand.**
- **During wiring, check that the anode and cathode of the test lines are properly and tightly connected; anode ON and cathode OFF are prohibited.**
- **If the object to be tested is a battery, when wiring, please take measures to prevent reverse connection of the battery and prevent sparks.**
- **Ensure that the output terminals are either insulated or covered using, the safety covers provided, so that no accidental contact with lethal voltages can occur.**
- **Dangerous voltages may be present on the output terminals from external energy sources such as batteries. The external energy source must be disconnected before touching the output or sense terminals.**

The front and rear panels of this series power supply can be connected to the DUT. The maximum output current of the front panel terminals is 10A. If the current to be tested exceeds 10A, please be sure to connect the rear panel output terminals.

Local Measurement

The instrument is local output by default, that is, the Menu > System > Source > Remote Sense function is Off.

Copyright © Itech Electronic Co., Ltd.

To use local measurement, connect the DUT as shown in the figure below.

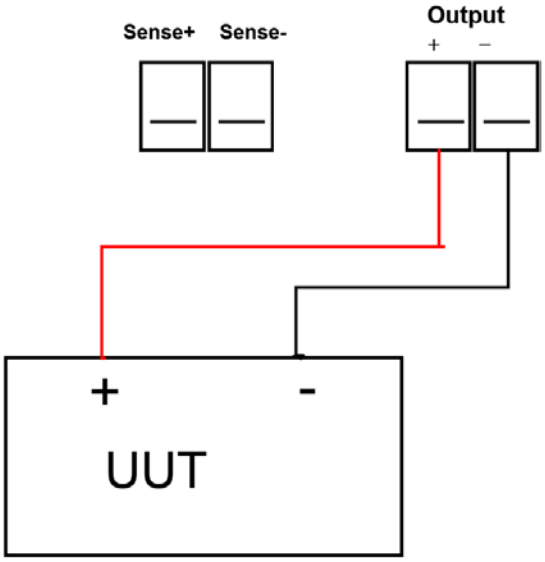

Remote Measurement Function (Sense)

Menu > System > Source > Remote Sense is set to On to indicate that the remote measurement function is enabled, and connect the DUT as shown in the figure below.

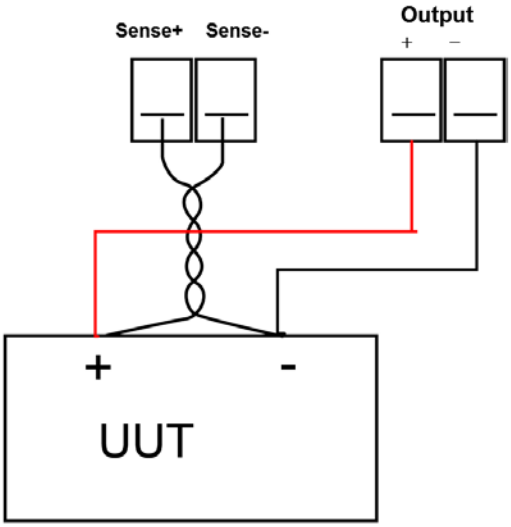

NOTE

To ensure the stability of the system, use armored twisted-pair cables between the remote sense terminals and the DUT. Pay attention to the positive and negative poles when wiring, otherwise it will damage the instrument. When the remote measurement function is turned on, don't leave the sense terminal unconnected.

1.7 Options Introduction

Note

The following optional accessories provided by the company are sold separately, and users need to purchase them separately according to their needs.

Users can purchase accessories for IT-N6900 series instruments separately, including the following two purposes:

1. Extended Interface

The optional interface expansion slot provided on the rear panel of the IT-N6900 series instrument can be flexibly expanded according to the user's needs, and different interface cards can be selected to achieve different functions. Interface types include communication interface and external analog interface.

Attention: The communication expansion interfaces IT-E176 and IT-E177 do not support hot-swapping and must be inserted into the board with the power down and then powered up.

- IT-E177 RS232+Analog interface

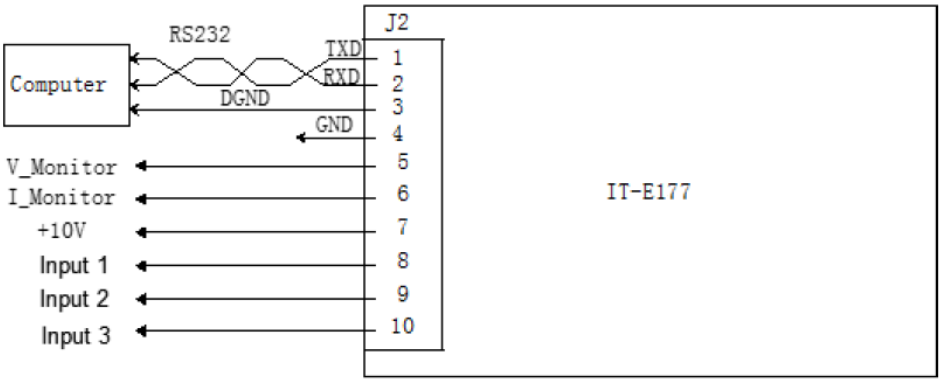

Pins	Description
1	RS–232 TXD pin for transmitting data.
2	RS–232 RXD pin for receiving data.
3	RS–232 DGND pin for grounding.
4	Ground terminal, that is, the negative terminal of pin 5 to pin 10.
5	Voltage monitoring terminal. It can output a voltage of 0 to 10V to monitor the output voltage from 0 to full scale.
6	Current monitoring terminal. It can output a voltage of 0 to 10V to monitor the output current from 0 to full scale.
7	Reference voltage (10V) test terminal. The accuracy is 0.03%. You can use a multimeter to measure this pin. When the output voltage of the pin is in the range of 10±0.03%*10, it indicates that the accessory is functioning normally. Otherwise, the function is abnormal and cannot be used.
8	Terminals for external analog function. For details, see Analogue Function (Ext-Program) (Optional).
9	
10	**Reserved terminal**

- IT-E176 GPIB Interface

2. Cabinet Installation

IT-N6900 series power supplies can be installed on standard 19-inch brackets. ITECH has prepared the IT-E158 bracket as a mounting kit for users.

The accessories models are listed in the following table:

Equipment name	Model	Description
GPIB communication card	IT-E176	Select this accessory when the user uses the GPIB interface to enable the remote operation function.
RS-232/External analog card	IT-E177	When users use functions such as RS-232 interface and external analog, choose this accessory.
Cabinet Mounting Brackets	IT-E158	Select this mounting kit when the instrument is mounted on a cabinet. For the detailed introduction of cabinet installation, please refer to "IT-E158 User Manual".

Copyright © Itech Electronic Co., Ltd.

Chapter2 Quick Reference

This chapter briefly introduces the front panel, rear panel, keyboard key functions and screen display functions of the IT-N6900 series power supply, so as to ensure that you can quickly understand the appearance, structure and key functions of the power supply before operating the power supply, so as to help you make better use of this series of power supplies.

2.1 Brief Introduction

The IT-N6900 series is a single output programmable DC power supply. This series of programmable DC power supplies can realize the combined output of various voltages and currents at a fixed power. A single power supply can meet the test of high voltage and low current or high current and low voltage, which greatly saves you cost and space.

IT-N6900 series power supply is also equipped with standard USB/LAN communication interface, optional RS232 & external analog, GPIB interface, widely used in DC-DC power modules, battery charging and sensors and other testing fields. The main features and benefits are as follows:

- 4.3” HD LCD
- Voltage: 60V, 150V
- Power: 850W, 1500W, wide range output
- Two current ranges, 1μA current resolution
- Lower ripple and noise
- Faster voltage rise and fall
- With CC, CV priority, suitable for a variety of DUT's
- Trend analysis,monitor the voltage, current and power of the DUT in time
- Remote Sense function
- Support OVP, UVP, OCP, OPP, OTP, F oldback protection function
- Built-in USB/LAN/Digital IO communication interface, optional GPIB/RS232/analog IO

Model	Voltage	Current	Power
IT-N6952	60V	25A	850W
IT-N6962	60V	25A	1500W*1
IT-N6953	150V	10A	850W
IT-N6963	150V	10A	1500W*1

*1 At 110Vac input, the power is 850W

2.2 Front-Panel Overview

The front panel of IT-N6900 is introduced as follows.

1. Handle (removable)
2. Rubber shock absorber (front)
3. U disk is inserted into the interface, which can realize screen capture and data record saving
4. 4.3” HD LCD
5. Numeric keys (compound function) and ESC escape key
6. Pressable pulsating knob, left and right direction keys, Enter key
7. Shift compound key, View switch key, Menu key and power switch
8. Foot (removable)
9. The function keys corresponding to the menu at the bottom of the screen (different menus are displayed on different screens)
10. V-set, I-set, On/Off output switch key
11. Output terminals (front panel terminals are used to facilitate wiring, but the maximum current can only be 10A. Otherwise the screen displays Focp Protect! This protection can be cleared by pressing esc. Current outputs above 10A can be wired from the rear panel outputs.)

Copyright © Itech Electronic Co., Ltd.

2.3 Keyboard Introduction

The key descriptions are as follows:

Key name	Function Description
Shift	Compound keys, used in combination with other keys to achieve compound menu settings
View	View switch button. In any interface, press the **[View]** key to switch between the Meter interface and the Recorder interface.
Menu	Menu function keys
Power	Power switch button
0-9	Numeric input keys
⊙	Decimal point
Esc	Cancel/Return key
Shift+1	Config menu shortcut keys
Shift+2	Protect function shortcut keys
Shift+3	Recall function shortcut key to recall a stored system parameter setting value
Shift+4	Save function shortcut key to store system parameter settings.
Shift+5	System menu shortcut keys
Shift+6	List function shortcut keys
Shift+7	The Trig function shortcut key is used to set the trigger under the List operation.
Shift+8	The Lock function shortcut key is used to lock the panel keys.
Shift+9	The local key returns the power supply from remote mode to local mode.
Shift+⊙	Screen print key, insert the U disk in FAT 32 format before use.
V-set	Voltage setting key, set the output voltage value of the power supply.
I-set	Current setting key, set the output current value of the power supply.
On/Off	The output on/off key is used to control the output state of the power supply.
Enter	A command can be selected and moved to the next level in the menu. In addition, you need to press Enter to confirm saving after changing the settings.
⇦	The cursor moves to the left when pressed.
⇨	The cursor moves to the right when pressed.

Copyright © Itech Electronic Co., Ltd.

2.4 Status Bar Indicator Description

Status bar indicator and descriptions are as follows:

Indicator	Description	Indicator	Description
USB	U disk inserted	LIST	LIST is running
SENSE	Sense remote measurement function is enabled	LIST	LIST runs waiting for trigger status
ANALOG	External analog control function is enabled	CV	Set CV priority, actual CV priority
CC	Set CC priority, actual CC priority	V OV	OVP overvoltage protection
REM	The device is under remote control	A OC	OCP overcurrent protection
OTP	OTP over temperature protection	LOCK	Keyboard lock function is on
ERROR	Executing error	OFF	Output off state
	The GPIB board is recognized.	INHIBIT	INHIBIT LATCH protection
W POWER	OPP Overpower Protection	S SENSE	SENSE protection
A UC	UCP Undercurrent Protection	V UV	UVP Undervoltage Protection
X ERROR	Serious error	F FOLD	Foldback protection
A FRONT	Front panel overcurrent protection	CC	Set CV priority, actual CC priority
CV	Set CC priority, actual CV priority	INHIBIT	INHIBIT LIVING alarm

2.5 Rear Panel Introduction

The rear panel of IT-N6900 is introduced as follows.

Copyright © Itech Electronic Co., Ltd.

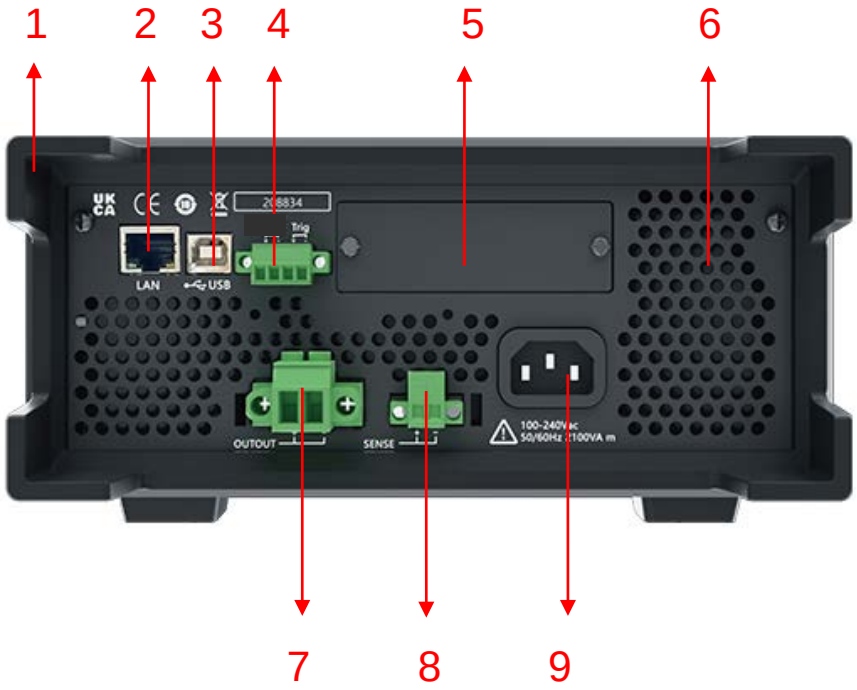

1. Rubber shock absorber (rear)
2. LAN communication interface
3. USB communication interface
4. Inhibit (inhibit output) and trigger function terminals
5. Reserved ports for optional interface cards
6. Heat dissipation window (air outlet)
7. DC output terminal (rated current output terminal)
8. Remote measurement terminal (Sense)
9. AC power input socket

2.6 Introduction of Side Air Holes

1. Air inlet
2. Air outlet

Copyright © Itech Electronic Co., Ltd.

2.7 Power-on Selftest

A successful selftest indicates that the purchased power product meets delivery standards and is available for normal usage.

Before operation, please confirm that you have fully understood the safety instructions.

WARNING

- To avoid burning out, be sure to confirm that power voltage matches with supply voltage.
- Be sure to connect the main power socket to the power outlet of protective grounding. Do not use terminal board without protective grounding. Before operation, be sure that the power supply is well grounded.
- To avoid burning out, pay attention to marks of positive and negative polarities before wiring.

Selftest Steps

The normal self-test process of the power supply is as follows:

1. Connect the power cord correctly, press the power button to turn on the power.

   Power supply self-test.

2. After the power supply self-test is completed, the screen displays the following information about the output voltage and current status.

Error Information References

The following error information may occur when an error occurs during Power On self-test:

- If the EEPROM was damaged, the VFD will display “EEPROM FAIL”.

- If the last power status in EEPROM is lost, then VFD will display “SYST LOST”.
- If the calibration data in EEPROM is lost, then VFD will display “CAL LOST”.
- If the factory calibration data in EEPROM is lost, and then the VFD will display “FACT LOST”.

When the above prompt message appears, it is recommended that you return to the factory for overhaul.

Exception Handling

If the power supply cannot start normally, please check and take measures by reference to steps below.

1. Check whether the power cord is correctly connected and confirm whether the power supply is powered.
   Correct wiring of power cord => 2
   Incorrect wiring of power cord => Re-connect the power cord and check whether the exception is removed.

2. Check whether the power in On. Power key is under “I” On status.
   Yes => 3
   No => Please check the Power key to start power and check whether the exception is removed.

3. If the power supply still cannot be turned on normally, please contact ITECH after-sales technical support.

Copyright © Itech Electronic Co., Ltd.

Chapter3 Function and Features

This chapter will describe the functions and characteristics of the power supply in detail.

3.1 Switching of Local/Remote Operation Modes

The power supply provides two modes of operation, local operation and remote operation. Switching between the two operating modes is possible through communication commands. Power initialization mode defaults to local operation mode.

- Local operation mode: use the buttons on the power supply body to perform related operations.
- Remote operation mode: The power supply is connected to the PC, and the related operations of the power supply are performed on the PC. When the power supply is in remote operation mode, except for the **[Shift]** + **[9], On/Off** keys, other keys on the panel have no effect. It is possible to switch to local operating mode with the [**Shift**] + [**9**] keys. When the operating mode is changed, the output parameters of the power supply will not be affected.

3.2 Output On/Off Operation

You can control the output switch of the power supply by pressing the On/Off key on the front panel. The On/Off key light is on, indicating that the output is turned on, and the On/Off key light is off, indicating that the output is turned off. When the power is on, the working status sign (CV/CC) on the screen will be lit.

Note

After the power supply is connected to the DUT, press the On/Off key to turn on the output. If the power supply has no output after the output is turned on, please check the voltage and current setting values, please set both the voltage and current to non-zero values, and then turn on the output.

3.3 Power State CC/CV Switching

The output voltage of the power supply and the resistance of the load determine the output current. Only when the output current is lower than the set current limit, the power supply outputs in constant voltage CV mode, and it is indicated by CV status.

If the output current is limited by the current set value or rated current, the power supply will switch to constant current CC mode output, and it will be indicated by the CC status.

Copyright © Itech Electronic Co., Ltd.

The voltage and current output of IT-N6952 and IT-N6953 models are also controlled by power. Due to the mutual influence of voltage, current and power limit, take IT-N6952 (60V/25A/850W) as an example, when the set voltage value is 10V, the current value is 10A, and the output power is 100W at this time; when the voltage value is set to 60V and the current value is 20A, at this time, due to the limitation of the rated power of 850W, the actual output power is 850W, the power supply switches between CC and CV states according to the actual current in the loop.

3.4 Meter Interface

After the power is turned on, the following interface is displayed:

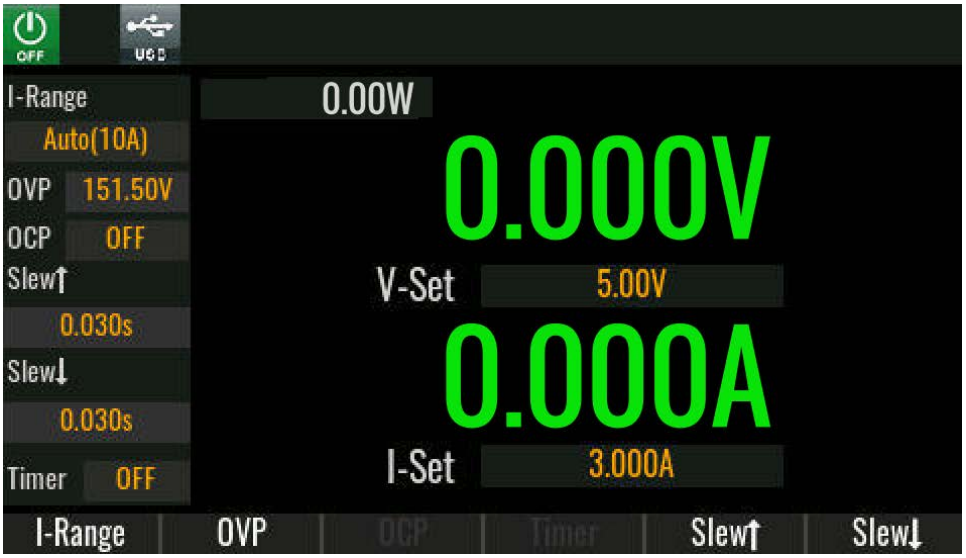

Voltage Setup

The voltage setting range is from 0V to the maximum output voltage value. When the **[V-set]** key is pressed, the key light will be lit, and the voltage setting operation can be performed at this time. The following methods can be used to set the output voltage value through the front panel.

- After the power is turned on, press the **[V-set]** key, use the left/right direction keys to adjust the cursor to the specified position, and rotate the knob to adjust the voltage setting value.
- After the power is turned on, press the **[V-set]** key and the **[0]** to **[9]** number keys and then press the **[Enter]** key to set the voltage value.

Current Setup

The range of current setting is between 0A and full rated output current. When the **[I-set]** key is pressed, the key light will be lit, and the current setting operation can be performed at this time. The following methods can be used to set the output current value through the front panel.

- After the power is turned on, press the **[I-set]** key, use the left/right direction keys to adjust the cursor to the specified position, and rotate the knob to

adjust the current setting value.

- After the power is turned on, press the **[I-set]** key and the **[0]** to **[9]** number keys and then press the **[Enter]** key to set the current value.

I-Range / OVP / OCP / Timer / Slew ↑ / Slew ↓

Press the button corresponding to each function at the bottom of the screen to quickly set the current range, OVP protection, OCP protection, Timer function, voltage/current rising slope, voltage/current falling slope.

The settings here are the shortcut settings in the **Config** menu and the **Protect** menu under the **Menu**. If you need more parameter settings, please enter the **Config** menu and the **Protect** menu to set.

Among them, OVP, OCP and Timer are OFF by default. At this time, the corresponding function at the bottom of the screen is displayed in gray. You need to enter the **Config** menu and **Protect** menu to set the corresponding function to ON, and then set the corresponding parameter value in the **Mete**r interface.

3.5 Recorder Interface

The Recorder function realizes trend graph analysis, monitors the voltage, current, and power curves of the object to be tested for a long time, and can save the data during the test to the U disk in real time. The supported file formats are .csv and .Tdms.

Go to **Menu** > **Recorder** and the interface will display as follows:

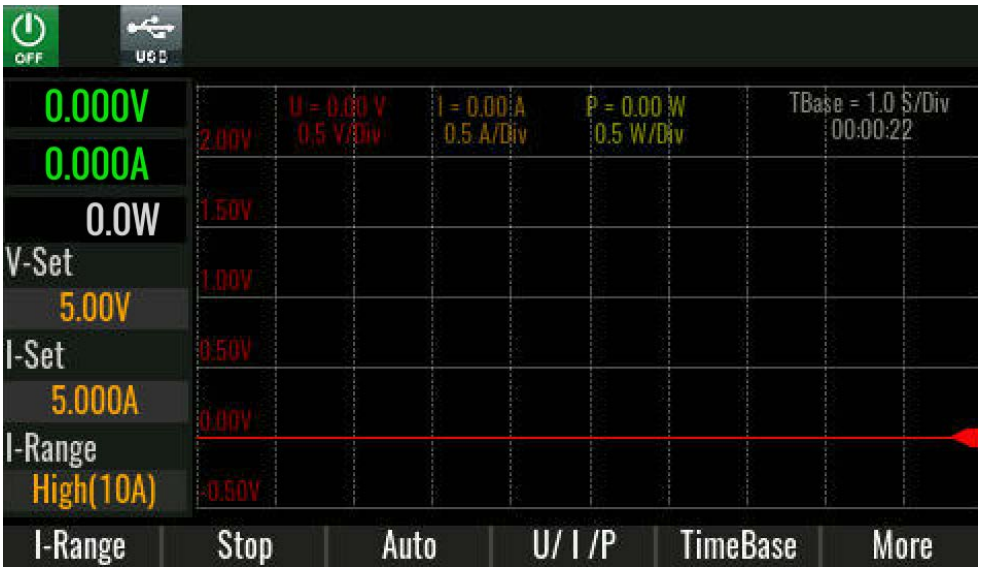

- I-Range: Current range switching
- HoldOn / HoldOff: Pause/continue curve drawing
- Auto: The waveform scale is adaptive, according to the actual output voltage/current/power value, the waveform display is automatically adjusted to an appropriate scale.

- U / I / P: The resolution of the voltage, current, and power waveform display, that is, the voltage, current, and power values represented by each grid of the Y-axis. The setting method is: first press the button at the bottom of the screen to switch the U / I / P option, then turn the knob or press the left / right direction keys to adjust the value.

- TimeBase: Time base resolution adjustment, that is, the time represented by each division of the X axis.

- More: Recorder function configuration menu, the specific parameters are described below:

  - -Base: Set whether the voltage waveform (L1/Volt), current waveform (L2/Curr) and power waveform (L3/Pow) are displayed in the Recorder interface, setting On means displaying the corresponding waveforms, setting Off means not displaying.

  - -Advance: Save the real-time collected data to a USB flash drive with optional file formats of .csv and .Tdms.

  - Export: When exporting internal data, click Export to export to a USB flash drive;When exporting to external data, the interface shows “Start” or “Stop”, click “Start” to write data to USB flash disk.Click “Stop” or pull out the USB flash disk directly to stop data writing.

  - Return: Returns the interface to Recorder.

3.6 System Interface

The System menu contains the settings for the following functional parameters of the power supply, which are described as follows:

The parameter setting method is as follows:

1. Press the corresponding button at the bottom of the screen to switch to the corresponding page, such as General.

2. In the General interface, turn the knob or press the left/right direction keys

to adjust the cursor on the specified parameter.

3. Press **[Enter]** to enter the parameter modification state.
4. Adjust the parameter value by turning the knob or pressing the left/right direction keys.
5. Press **[Enter]** to confirm the modification.

Menu Details:

General	Key Sound	OFF	Set no sound when pressing the keyboard
		ON	Make a sound when you press the keyboard
	Knob Immediately	OFF	Setting the pulsation knob adjustment does not take effect immediately, and needs to manually press the **[Enter]** key to take effect.
		ON	Set the pulsation knob adjustment to take effect immediately.
	LCD Brightness		To adjust screen brightness:10%~100%
	Trigger Source	Manual	The trigger method is **[Shift]** + **[7]** key trigger
		Bus	The trigger mode is ***TRG** command trigger
		External	Trigger mode is external signal trigger (falling edge signal for 5V and below)
	Trigger Port	In	The signal direction of the Trig pin is the input signal, that is, when the Trig pin receives a low-level trigger signal, the instrument performs a trigger operation.
		Out	The signal direction of the Trig pin is the output signal, that is, when the instrument receives a panel key or command trigger, it outputs a low-level signal through the Trig pin.
	Language	English	Language selection is English
		simplified Chinese	Language selection is Simplified Chinese
Source	Power-On Setup	Reset	Sets the parameters to the system defaults when the power supply is powered up.
		Last	Set the parameters when the power supply is powered up to those of the last time it was turned off, and the output state is the same as the state before it was turned off.
		Last+Off	Set the parameters when the power supply is powered up to the parameters when it was last turned off and the output state is OFF.
	Remote Sense	Off	Sense switch off
		On	Sense switch on
	Leak Circuit	On	Turn on the internal load. When the output voltage is within 30V, the absorption current is about 200mA, and if the output voltage is above 30V, the power absorption is about 10W.
		Off	Turn off the internal load.
	On Delay		Output open delay time. Setting range: 0-10.000 in steps of 0.001. Unit: seconds.

	Off Delay		Output off delay time. Setting range: 0-10.000 in steps of 0.001. Unit: seconds.
	System Reset	No	Keep the original menu settings unchanged
		Yes	Restore factory defaults
Lan	Mode		● Auto: Automatically set IP address and other information ● Manual: Manually set the IP address and other information. After selecting Manual, the following editable setting items will appear. – IP: IP address settings – Mask: Subnet mask setting – Gateway: Gateway address setting
About	Product Model		Instrument model
	SN		Instrument serial number
	Soft Version		Instrument software version
	MAC		Instrument MAC address
	Hardware Version		Instrument hardware version
Extend	The setting menu after the optional communication interface card (IT-E177 or IT-E176) is inserted, please refer to the corresponding function introduction for specific parameters.		

3.7 Config Interface

The Config interface contains the parameter settings of the following power functions, which are described as follows:

I-Range	Gear selection of current measurement value: AUTO: Automatically switch the current measurement gear HIGH: Current high gear LOW: Current small gear
Measure Speed	Choice of measurement speed: Fast: high speed Medium: Medium speed Slow: slow
Priority	Voltage: CV priority

	Current: CC priority
Slew Type	Sets the unit of the slope: Time: the unit of slope is second Slew Rate: Select Voltage or Current according to Priority, and the unit of slope is V/ms or A/ms.
Slew ↑	Set the rising slope of voltage/current according to the selected CV/CC priority mode.When Slew Type is Time, the setting range is 0.001~9.999s; When Slew Type is Slew Rate, the setting range is different for different models.
Slew ↓	Set the voltage/current slew rate according to the selected CV/CC priority mode.When Slew Type is Time, the setting range is 0.001~9.999s; When Slew Type is Slew Rate, the setting range is different for different models.
Timer	Output Timer Setting: Off: Close the output timer On: Open the output timer, also set the number of seconds for the timer, set the range 1~9999, step 1S.

3.8 List Interface

The List interface provides functions such as custom waveform editing, running, import/export, etc. The details are as follows:

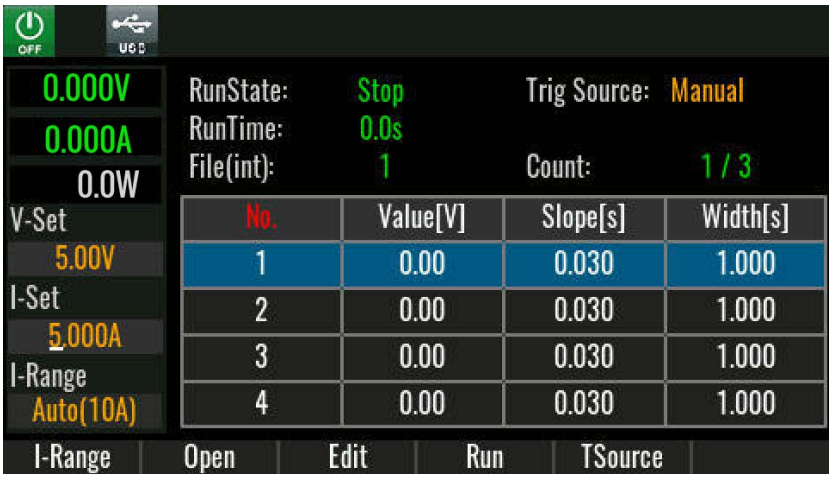

Interface Introduction

- I-Range: Set the current gear
- Open: Select/open List file
  - Internal: Select the List file saved in the internal memory of the instrument. The save address is 1~10, that is, up to 10 files can be saved.
  - USB: Select the List file stored in the root directory of the external U disk (the U disk is plugged in on the front panel).

Note: The List file stored in the root directory of the USB flash drive must be in .csv format, and the file must meet the template requirements. Users can

save a List file template to the root directory of the U disk through Edit > Save As > USB, so that the .csv file can be edited on the computer later, and the edited .csv file can be re-imported into the instrument for running.

- Edit: Edit List file
- Run / Stop: Run/stop List
- TSource: Set the trigger source

Edit List

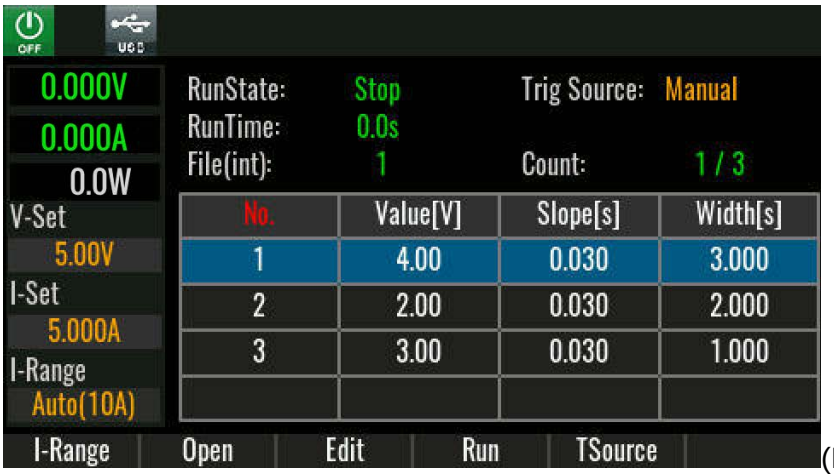

(Fig. 1)

The method of editing the List file is described as follows:

1. Press Edit to enter the List editing interface (Figure 2), you can edit the List step; press the [Esc] key, the cursor (blue box) can exit to the position shown in Figure 3, that is, the waveform editing area; the cursor is in the position of Figure 3, press the [Esc] key to exit to the List interface where Figure 1 is located.

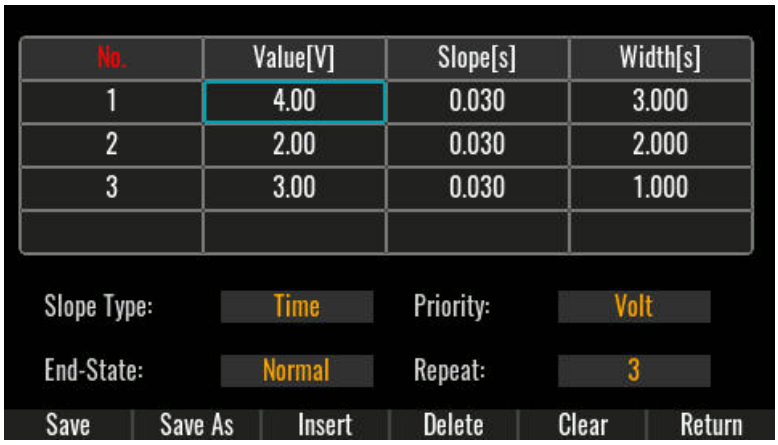

(Fig. 2)

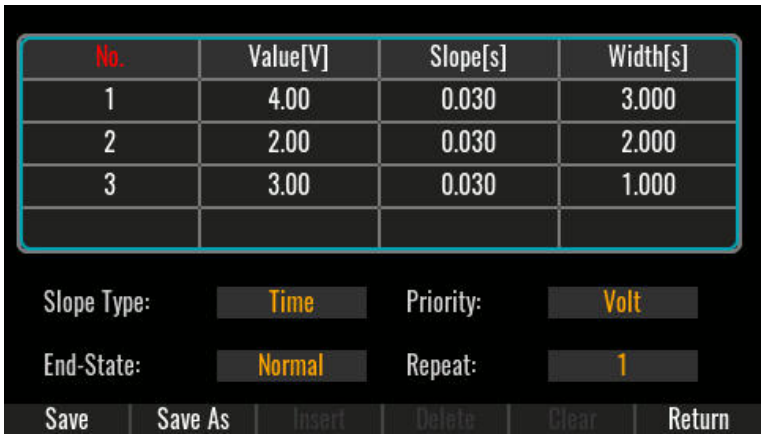

(Fig. 3)

2. Press the button below [Insert] to insert a line of data, at this time the cursor falls in the waveform editing area.

   Note: Supports up to 100 rows of data, i.e. 100 Steps.

   Several other on-screen keys are described as follows:

   - Delete: Deletes the selected row of data.
   - Clear: Clears the data in the editing area of the edited List waveform.
   - Return: Return to List main screen.

3. Turn the knob or press the left/right arrow keys to select the parameter of a Step and press [Enter] to make the parameter enter the editing state.

4. Press the numeric keys or turn the knob to set the Step and press [Enter] to confirm the change.

5. When the cursor is at the position of Figure 3, you can turn the knob or press the left/right arrow keys to select Priority and set CC or CV priority.

6. Set several other parameters in the same way.

   - Slope Type: unit of slope
   - End-State: The state after the List has finished running
     - Normal: Return to the voltage and current settings before the List operation, and the output is still on.
     - Last: Stays at the voltage/current setting of the last Step of the List, and the output is still on.
     - Off: Turn off the output after the run is complete.
   - Repeat: Number of cycles of List, setting range: 1~65535

7. After the entire List is edited, press [Save As] and choose to save to an address within the instrument or to an external USB flash drive.

Run List

1. On the main interface of List, press the **[Open]** key to enter the List file storage area.
2. Turn the knob, select the previously edited List file, and press **[Enter]** to load.
3. Press the **[Run / Stop]** key to run the selected List file.

   At this time, the mark of List waiting to be triggered appears at the top of the screen.
4. Turn on **[On/Off].**

   At this time, the instrument outputs according to the settings of V-set and I-set in the main interface of List.

   Note: If the object to be tested has been connected at this time, pay attention to whether the set voltage and current values match the actual test requirements.
5. Trigger List to run according to the set Tsource.

3.9 Factory Interface

Factory is the factory menu, in order to facilitate troubleshooting and problem analysis, in case of troubleshooting, please operate under the guidance of ITECH technical support.

3.10 Save/Recall Operation

The power supply can save some commonly used parameters in 6×10 groups of non-volatile memory, which can be easily and quickly taken out by users. You can use the compound keys **[Shift]** + **[4]** (Save) and **[Shift]** + **[3]** (Recall) on the front panel, or the Save and Recall functions in the Menu menu, or the SCPI commands *SAV, *RCL to achieve save/recall operations

Storage contents include: V-set voltage setting value, I-set current setting value, CC/CV priority, voltage/current rising slope, voltage/current falling slope.

Save Operation

1. Enter the Save interface through the compound keys **[Shift]** + **[4]** (Save) or through the Menu menu.

Copyright © Itech Electronic Co., Ltd.

2. Press the button corresponding to Group at the bottom of the screen and select the saved group name.

3. Press 0~9 number keys or rotate the knob to select the corresponding save address.

4. Press **[Enter]** to store the preset parameters of power supply in the specified storage area.

Recall Operation

1. Enter the Recall interface through the compound key **[Shift]** + **[3]** (Recall) or through the Menu menu.

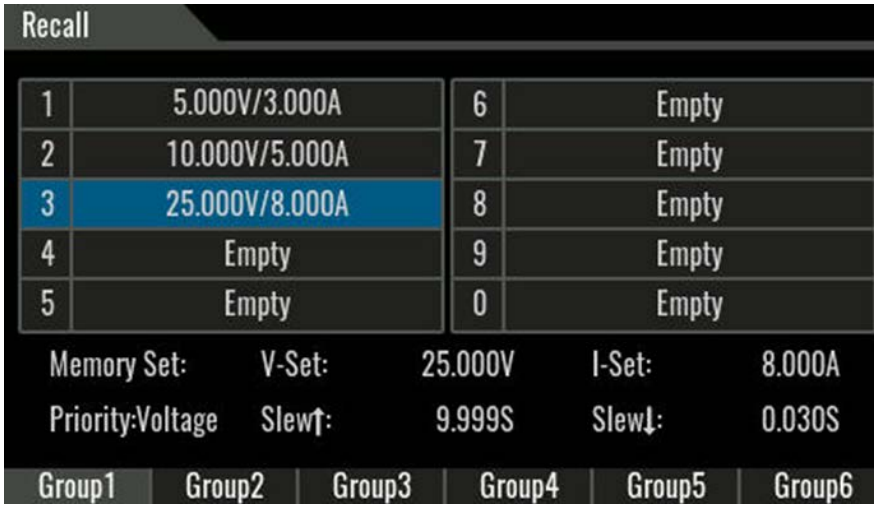

2. Press the button corresponding to the Group at the bottom of the screen, and select the group name where the recalled parameter is located.

3. Press the number keys 0~9 or rotate the knob to select the corresponding recalled address.

4. Press **[Enter]** to recall the parameters of the specified area.

Copyright © Itech Electronic Co., Ltd.

3.11 Protect Interface

The IT-N6900 series power supply supports comprehensive protection functions. The interface is described as follows:

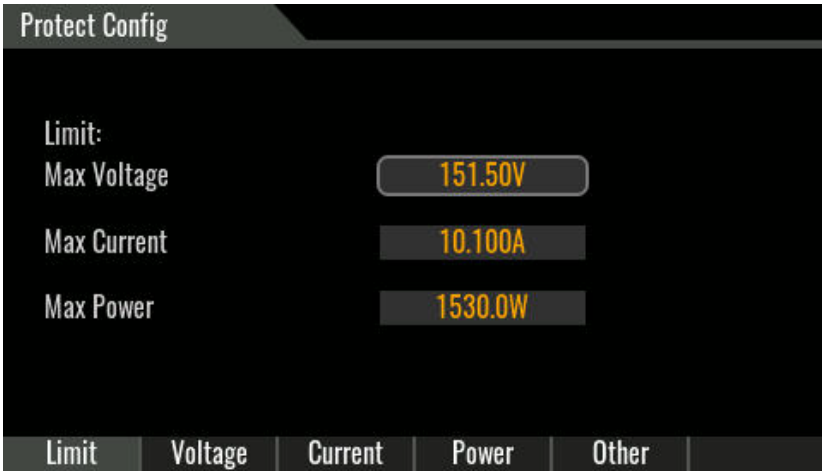

Limit	Set the limit values of voltage, current and power to avoid incorrect settings of output voltage, output current and output power in any interface. Max Voltage: Voltage limit Max Current: Current limit Max Power: power limit		
Voltage	Sets the overvoltage or undervoltage protection of the voltage.		
	OVP	Over voltage protection function	
		Off	Disable OVP function (Def)
		On	Enable the OVP function
		Value	OVP value
		Delay	Delay time of protection. Setting range: 0.000~10S, step 0.001S, default 10S.
	UVP	Under voltage protection function	
		Off	Disable UVP function (Def)
		On	Enable UVP function

		Warm	The instrument warm-up time, which is set to prevent the voltage from reaching the protection value during the rising process and triggering the protection state. Because this transient condition should not be regarded as an undervoltage fault, and there is no need to trigger the protection mechanism. Setting range: 0.00~30S, step 0.01S, default 30S
		Value	UVP value
		Delay	Delay time of protection. Setting range: 0.000~10S, step 0.001S, default 10S.
Current	Set the current overcurrent or undercurrent protection.		
	OCP	Overcurrent protection function	
		Off	Disable OCP function (Def)
		On	Enable OCP function
		Value	OCP value
		Delay	Delay time of protection. Setting range: 0.000~10S, step 0.001S, default 10S.
	UCP	Undercurrent protection function	
		Off	Disable the UCP function (Def)
		On	Enable the UCP function
		Warm	The instrument warm-up time, which is set to prevent the current from reaching the protection value during the rising process and triggering the protection state. Because this transient condition should not be considered an undercurrent fault, and there is no need to trigger the protection mechanism. Setting range: 0.00~30S, step 0.01S, default 30S
		Value	UCP value
		Delay	Delay time of protection. Setting range: 0.000~10S, step 0.001S, default 10S.
Power	OPP	Over power protection function	
		Off	Disable the OPP function (Def)

		On	Enable the OPP function	
			Value	OPP value
			Delay	Delay time of protection. Setting range: 0.000~10S, step 0.001S, default 10S.
Other	Fold Back	Foldback protection function. Default is Off. ● If CC is selected, it means that when the operating mode of the instrument is switched from CV mode to CC mode, the instrument triggers the protection and the output is OFF. After selecting CC, you also need to set the protection delay time. Setting range: 0.000~10, step 0.001S, default 0S. ● If CV is selected, it means that when the operation mode of the instrument is switched from CC mode to CV mode, the instrument triggers the protection and the output is OFF. After selecting CV, it is also necessary to set the protection delay time. Setting range: 0.000~10S, step 0.001S, default 0S. ● Select Off to disable the foldback protection function.		
	Inhibit Mode	Inhibit output mode setting. Default is Off. ● Select Latch, when the Inhibit pin on the rear panel receives a low-level signal, the output is off, and even if the pin receives a high-level signal, the output will not be restored, and must be manually turned on **[On/Off]**. ● Select Living, when the Inhibit pin on the rear panel receives a low-level signal, the output is off, and when it receives a high-level signal, the output is resumed. ● If Off is selected, the output state is not controlled by the Inhibit pin on the rear panel.		

3.12 Trigger Function

Set Trigger Source

Menu > System > General > Trigger Source, this option is used to set whether the trigger signal is keyboard trigger, command trigger or external signal trigger during List operation.

- If the option is Manual (default), the trigger signal is provided by the panel compound keys **[Shift]** + **[7]** (Trigger);

- If the option is Bus, it is command trigger mode (*TRG trigger command);
- If the option is External, it is the external signal trigger mode, that is, if the Trig terminal on the rear panel receives a **low-level** signal once, it will trigger a List operation.

Set the Signal Direction of the Trig Pin

Menu > System > General > Trigger Port, this option is used to set the signal direction of the Trig pin.

- Out: The signal direction of the Trig pin is the output signal, that is, when the instrument receives the panel key trigger or command trigger, it outputs a low-level signal through the Trig pin.
- In: The signal direction of the Trig pin is the input signal, that is, when the Trig pin receives a low-level trigger signal, the instrument performs a trigger operation.

This function is applicable to the List synchronization trigger of multiple IT-N6900, please refer to the following wiring.

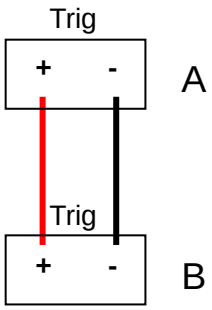

For example, the Trigger Port of Power A is set to Out, and the Trigger Source is Manual, the Trigger Port of Power B is set to In, and the Trigger Source is External. On the panel of power supply A, the **[Shift]** + **[7]** (Trigger) button triggers the execution of the List of power supply A. At this time, the Trig pin of power supply A outputs a low-level signal, which triggers the running of the List of power supply B.

3.13 Inner Load Switch Settings

When **Menu > System > Source > Leak Circuit** set to **ON** (default), it means that the inner load is turned on, and the Meter voltage will quickly drop to 0 after the output is Off. When the output voltage is within 30V, the absorption current is about 200mA, and if the output voltage is above 30V, the power absorption is about 10W.

When set to Off, it means to turn off the internal load, the Meter voltage will slowly drop to 0 after the output is Off.

If the DUT is a battery and Leak Circuit is set to ON, the power supply will discharge the battery with a current of about 200mA when the power supply is

Copyright © Itech Electronic Co., Ltd.

still connected to the battery after the output is OFF. Please disconnect the DUT and the power supply in time to avoid continuously discharging the battery.

3.14 Keyboard Lock Function

The instrument panel keys can be locked by the compound keys **[Shift]** + **[8]** (Lock) on the panel. At this time, the LOCK icon will be displayed at the top of the screen. Except for the **[ON/OFF]** key and the **[Shift]** key, all other keys are disabled, press this compound key again to cancel the lock.

3.15 Rear Panel Terminal Functions

Inhibit Function

Inhibit the output interface, short the Inhibit+ and Inhibit– interfaces to disable the power output.

Menu > Protect > Other > Inhibit Set in Living mode, to restore, remove the wire between Inhibit+ and Inhibit–.

Menu > Protect > Other > Inhibit Set in Latch mode, to restore, remove the wire between Inhibit+ and Inhibit–, press **[Esc]** to clear the protection, and turn on the **[ON/OFF]** manually.

Trigger Function

External trigger signal output and input interface, when **Menu > System > General > Trigger Port** is in **In** state, it can receive a low-level pulse signal as a trigger source; when in **Out** state, when a trigger event occurs, the instrument can output a low-level pulse trigger signal.

3.16 External Analog Function (State) (optional)

This menu item is used to control whether to enable the external analog function. This function is not a standard configuration of the instrument, but a function selected by the user according to their needs. If the user does not select this function, this menu item will not be displayed.

The external analog function is to control the actual output voltage/current value of the instrument by inputting a voltage between –10V~10V to the specified pin, and limit the output of the voltage/current within the specified range.

The menu items and parameters corresponding to this function are introduced as follows:

Copyright © Itech Electronic Co., Ltd.

State	External analog function menu		
	On / Off	Function switch: • On: When the external analog function is turned on, the channel parameters can't be set at this time. • Off: Turn off the external analog function, you can set the channel parameters at this time.	
		CH1MX	Slope factor for channel 1 (programmed channel)
		CH1MB	Offset for channel 1 (programmed channel)
		CH2MX	Slope coefficient for channel 2 (upper channel)
		CH2MB	Offset for channel 2 (upper channel).

- CV priority: The actual output voltage value Vset of the instrument will be adjusted according to the parameter setting of CH1 and the input voltage of the corresponding pin. At the same time, the current setting value I-set will be adjusted according to the parameter setting of CH2 and the input voltage of the corresponding pin.
- CC priority: The actual output current value Iset of the instrument will be adjusted according to the parameter setting of CH1 and the input voltage of the corresponding pin. At the same time, the voltage setting value V-set will be adjusted according to the parameter setting of CH2 and the input voltage of the corresponding pin.

Analog Card Interface Introduction

The interface of the analog function is located on the optional IT-E177 board. The introduction of each pin is as follows.

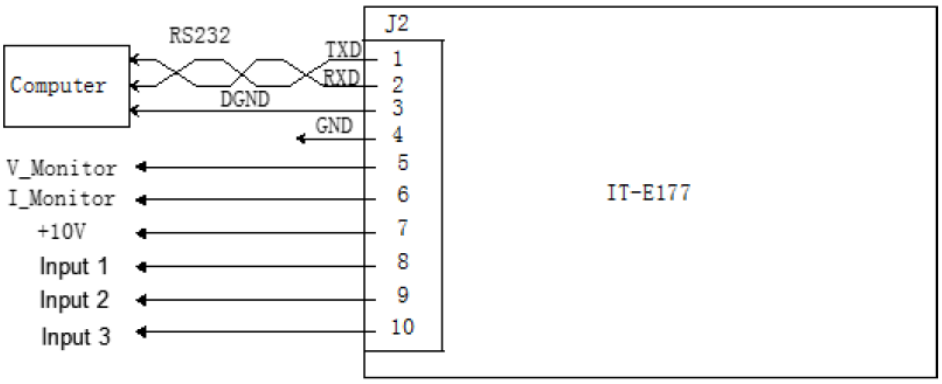

Pins	Description
4	Ground terminal.
8	Used to set the output voltage/current value, corresponding to CH1 in the menu.
9	It is used to set the upper limit value of voltage/current, corresponding to CH2 in the menu. **Note: Both pins 8 and 9 need to be connected, not only one of them.**
10	reserved interface, no need to set.

Analog Conversion Relationship Introduction

Taking the CH1 programming channel as an example, the user needs to calculate the values of Mx and Mb according to the following formulas, and then set these two values through the front panel keys (or SCPI remote commands) respectively.

NOTE

The parameter setting principles of Ch1 and Ch2 are the same, so they will not be repeated.

- CV priority:

$$MX = \frac{V_{out2} - V_{out1}}{V_{in2} - V_{in1}}$$

$$MB = V_{out2} - MX * V_{in2}$$

- CC priority:

$$MX = \frac{I_{out2} - I_{out1}}{V_{in2} - V_{in1}}$$

$$MB = I_{out2} - MX * V_{in2}$$

Name	Description
Vin1	Enter the starting value of the voltage to pin 8. The setting range is: – 10~10V.
Vin2	Enter the termination value of the voltage to pin 8. The setting range is: – 10~10V, and Vin2>Vin1.

Copyright © Itech Electronic Co., Ltd.

Vout1	In CV priority mode, the initial value of the output voltage of the instrument.
Vout2	In CV priority mode, the termination value of the output voltage of the instrument, and Vout2>Vout1.
Iout1	In CC priority mode, the initial value of the output current of the instrument.
Iout2	In CC priority mode, the termination value of the output current of the instrument, and Iout2>Iout1. Note: Setting Iout2 too high will cause the calibration coefficients to deviate too much.

Analog Control

The following will take the CV priority mode as an example to introduce the steps.

1. Insert the IT-E177 board with the power down.
2. Refer to the figure below to complete the connection of the pins.

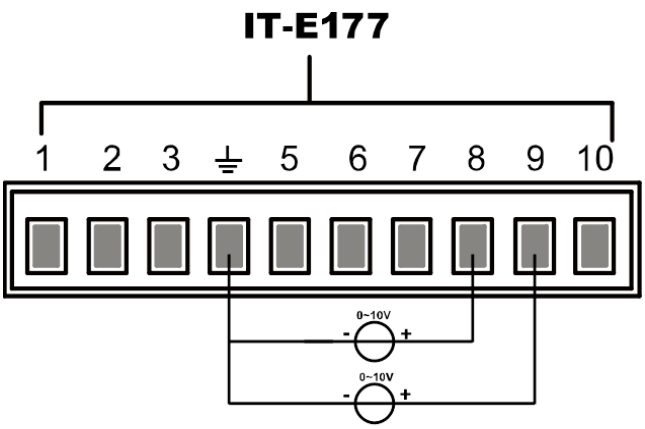

3. According to the conversion relationship of the above formula, calculate the MX and MB under the corresponding menu of CH1 and CH2 respectively.

   Examples of data used in this manual are shown in the table below.

Pins	Input Voltage	Output Voltage/Current	MX	MB	Description
8	Vin1 = 0	Vout1 = 0	5	0	By inputting a voltage of 0V~10V to pin 8, the actual output voltage V-set of the instrument is
	Vin2 = 10	Vout2 = 50			

					controlled to be 0~50V.
9	Vin1 = 0	Iout1 = 0	0.5	0	By inputting a voltage of 0V~10V to pin 9, the upper limit I-lim of the actual output current of the instrument is controlled to be 0~5A.
	Vin2 = 10	Iout2 = 5			

4. Power up the instrument.
5. Set the MX and MB of the corresponding pins.
   a) Press the **[Menu]** key to enter the Men**u** menu interface.
   b) Rotate the knob, select **System**, and press **[Enter]** to confirm. Enter the System function setting page.
   c) Rotate the knob, select **Extend**, and press **[Enter]** to confirm.
   d) Set State→On / Off to On, turn on the analog function switch.
   e) Set the MX and MB of the corresponding pins according to step 2.
6. When the input voltage in pin 8 is 10, the output voltage set value V-set of this instrument is 50V. The corresponding relationship conforms to the operation relationship of y=Mx+b.
7. When the input voltage in pin 9 is 10, the upper limit of the output current I-lim of the instrument is 5A.

Copyright © Itech Electronic Co., Ltd.

Chapter4 Remote Control

IT-N6900 series power supplies have two built-in communication interfaces: USB and LAN. The user can choose any one to communicate with the computer.

4.1 USB Interface

The USB interface is located on the rear panel of the instrument, and the user can connect the instrument and the computer through a cable with both USB ports (one end is USB A type interface and the other end is USB B type interface).

This series of power supply USB interfaces include the following two types, which do not need to be set in the menu, and can be operated remotely after installing the driver and connecting the USB communication cable.

- TMC: USB_TMC type interface, you need to install the NI-VISA driver adapted to the computer operating system version. Please download the driver from the NI official website. After the driver is installed successfully, it will be recognized as the USB device address in the computer device manager.
- VCP: Virtual serial port. The Win7 version of the operating system needs to install the supporting driver. Please download the driver from the ITECH official website or contact the ITECH technical support personnel to obtain it. The operating system of Win10 and above does not need to install the driver. Recognized as a COM port in the computer's device manager.

4.2 GPIB Interface (optional)

The GPIB (IEEE-488) interface is located on the IT-E176 communication card. When connecting to the computer, use the GPIB interface cable to connect the GPIB interface to the GPIB card on the computer. Be sure to make full contact and tighten the screws.

GPIB Configuration

Each device on the GPIB interface must have a unique integer address between 1 and 30. Your computer's GPIB interface card address must not conflict with any instrument on the interface bus. This setting is non-volatile; it does not change due to *RST.

When you purchase the interface accessory and successfully insert it into the corresponding position on the rear panel of the instrument, the menu item that can change the GPIB address will appear in the System menu (System). The specific operation steps are as follows:

1. Make sure that the power switch of the instrument is turned off, that is, the instrument is in the state of Power Off.

2. Insert the separately purchased GPIB interface card into the card slot on the rear panel of the instrument.

3. Connect the instrument to the computer through the GPIB interface cable. After the connection is successful, turn on the power switch of the instrument.

4. Press **[Menu]** on the front panel to enter the menu interface.

5. Rotate the knob, select **System**, and press **[Enter]**.

6. Select **Extend > GPIB**.

7. Press the numeric keys to set the GPIB address, and press **[Enter]**.

4.3 LAN Interface

When the user uses the LAN interface to communicate with the PC, the user should refer to the following contents to connect and configure the LAN interface. The LAN interface of this instrument conforms to the LXI standard.

Connection Interface

Connecting the Interface Use the following steps to quickly connect the instrument to a local area network and configure it. Two typical LAN interface systems are described below: private network and site network.

- **Connect to private LAN**

  A private LAN is a network in which LAN-enabled instruments and computers are directly connected. They are typically small, with no centrally managed resources. When connected to a computer, a standard network cable can be used to connect directly to the computer via the LAN interface.

- **Connect to site LAN**

  A site LAN is a local area network in which LAN-enabled instruments and computers are connected to the network through routers, hubs, and/or switches. They are typically large, centrally-managed networks with services such as DHCP and DNS servers. When connected to a computer, a network cable can be used to connect to the router, and the computer is also connected to the router.

Note

When using one crossover cable to connect PC directly, the gateway address of the instrument should be consistent with that of the PC, and the IP address should be at the same network segment with the PC's IP address.

When the instrument and computer are connected to the router, an independent IP address must be assigned for the instrument.

Configure LAN Interface Parameters

This series of power supplies supports the configuration of the following LAN communication parameters:

- MODE: Set IP mode
  - Automatically configure instrument address (Auto): Automatically configure the default IP address.
  - Manually configure the instrument address (Manual): The method is to set the following parameters of the instrument, the settings of these parameter values are only displayed when Manual is selected.
- IP: This value is the Internet Protocol (IP) address of the instrument. An IP address is required for all IP and TCP/IP communications with the instrument. An IP Address consists of 4 decimal numbers separated by periods. Each decimal number ranges from 0 through 255 with no leading zeros (for example, 169.254.2.20).
- Gateway: This value is the IP Address of the default gateway that allows the instrument to communicate with systems that are not on the local subnet, as determined by the subnet mask setting. The same numbering notation applies as for the IP Address. A value of 0.0.0.0 indicates that no default gateway is defined.
- Mask: This value is used to enable the instrument to determine if a client IP address is on the same local subnet. The same numbering notation applies as for the IP Address. When a client IP address is on a different subnet, all packets must be sent to the Default Gateway.
- PORT: This value indicates the port number corresponding to the service, which is fixed at 30000.

The configuration steps are as follows:

1. Press the **[Menu]** key to enter the Menu interface.
2. Rotate the knob, select System, and press **[Enter]** to confirm.
3. Press the button corresponding to Lan at the bottom of the screen.
4. Rotate the knob, select Mode, press **[Enter]** to confirm, and select IP setting mode.
   - Auto: Automatic mode, which can automatically set the address of the instrument;
   - Manual: Manual mode, you can manually set the address of the instrument. If Manual is selected, you need to set the IP, Gateway, Mask parameter values.

     The IP address needs to be configured to be on the same network segment as the computer.

     Gateway and Mask must be the same as the computer configuration.
5. After the configuration is complete, press the **[Esc]** key to return.
6. Restart the instrument by powering it off and on to activate the LAN settings.

Copyright © Itech Electronic Co., Ltd.

Note: After the settings are complete, the machine needs to be turned off and powered back on for the above settings to take effect.

Use Web Function

The instrument provides a built-in web server, allowing you to monitor it directly from your computer's web browser. To use this web server, connect the instrument and the computer via the LAN interface. Then, enter the instrument's IP address in the address bar at the top of the computer's web browser to access front panel control, including LAN configuration parameters.

The address format to be entered in the browser's address bar is:
http://192.168.200.100

192.168.200.100 is the default IP address. If it has been changed by the user, replace this IP with the actual configuration found in the instrument's Menu.

Clicking different buttons in the navigation bar on the left side of the window will display different interfaces. Detailed descriptions are as follows:

- **Home**: The main web interface, displaying the instrument model and appearance.
- **Information**: Displays system information such as the instrument's serial number and LAN configuration parameters.
- **Web Control**: Enables Web Control for remote operation of the instrument. On this interface, you can monitor and control the instrument.
- **Manual**: Redirects to the ITECH official website, where you can view or download relevant documentation for the instrument.

4.4 RS-232 Interface (optional)

RS-232 interface and external analog function share the same communication card IT-E177.

RS-232 Pin Definition

RS-232 interface pin description is as follows.

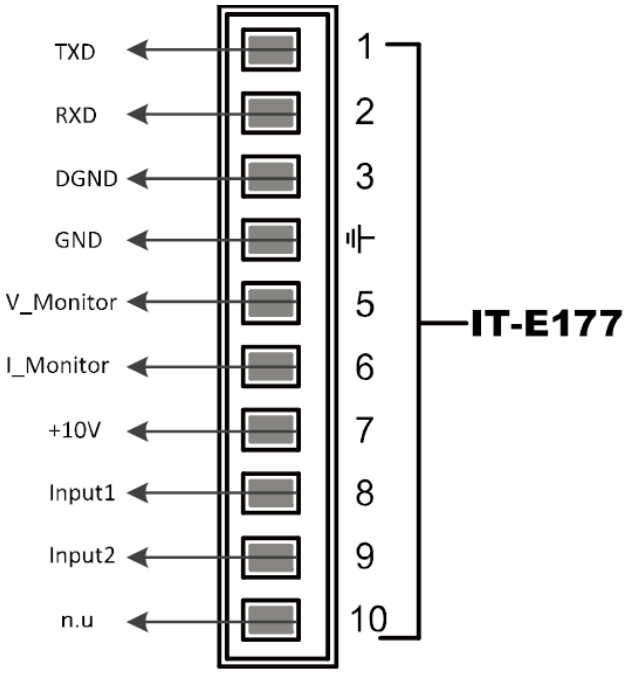

When using RS-232 interface for communication, it is necessary to connect pins 1, 2 and 3 of IT-E177 with PC.

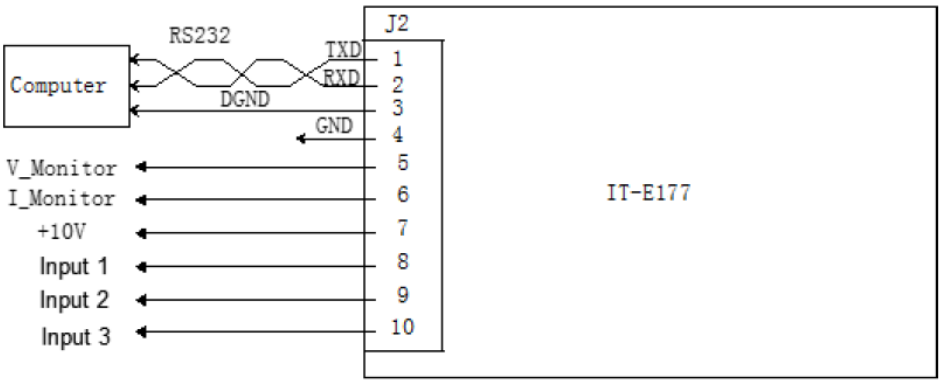

The pin descriptions are as follows:

Pin	Description
1	TXD, transmit data
2	RXD, receive data
3	DGND, ground

RS-232 Configuration

The RS232 menu item will only appear in the Menu menu after you have purchased the interface accessory and successfully inserted it into the corresponding position on the rear panel of the instrument. The specific operation steps are as follows:

1. Make sure that the power switch of the instrument is turned off, that is, the instrument is in the state of Power Off.
2. Insert the separately purchased RS-232 interface card into the card slot on the rear panel of the instrument.
3. Connect the instrument to the computer through the RS-232 cable. After the connection is successful, turn on the power switch of the instrument.
4. Press the **[Menu]** key to enter the Menu menu interface.
5. Rotate the knob, select **System**, and press **[Enter]** to confirm. Enter the System function setting page.
6. Select **Extend > RS232.**
7. Rotate the knob to set the communication baud rate and press **[Enter]** to confirm.
8. Rotate the knob to set the **Parity** and press **[Enter]** to confirm.

   None: No check

   Odd: Odd check

   Even: Even check
9. When finished, press the **[Esc]** key to return.

RS-232 Troubleshooting

If you encounter problems when using the RS-232 interface to communicate, the following will help solve the problem:

- Check whether the baud rate configuration of the computer and the instrument are the same;
- Make sure that the correct cables and adapters are connected. Note that the internal wiring may not be correct even if the cable has the proper plug;
- The interface cable must be connected to the correct serial port on the computer (COM1, COM2, etc.).

Copyright © Itech Electronic Co., Ltd.

Chapter5 Technical Specification

This chapter will introduce the main technical parameters such as rated voltage, rated current and rated power of the IT-N6900 power supply, as well as the storage environment and temperature of the power supply.

5.1 Main Technical Parameters

IT-N6952

Parameter		IT-N6952
Rated value	Output Voltage	0～60V
	Output Current	0～25A[1]
	Output Power	0～850W
	Resistance	/
Power regulation ±(%of Output+Offset)	Voltage	≤0.01%+4mV
	Current	≤0.02%+5mA
Load Regulation ±(%of Output+Offset)	Voltage	≤0.01%+4mV[2]
	Current	≤0.02%+5mA
Setup Resolution	Voltage	1mV
	Current	1mA
	Power	/
	OVP	1mV
	Resistance	/
Read Back Resolution	Voltage	1mV
	Current	1mA
		1uA (≤20mA)[3]
	Power	10mW
Setup Accuracy	Voltage	≤0.03%+12mV[4]
	Current	≤0.1%+25mA
	OVP	≤0.1%+0.2V
	Power	/
	Resistance	/

Copyright © Itech Electronic Co., Ltd.

Read Back Accuracy	Voltage	≤0.03%+12mV
	Current	≤0.1%+25mA
		≤0.05%+20uA (20mA)[5]
	Power	≤0.2%+3W
Ripple (20Hz -20MHz)	Peak Voltage	≤20mVp-p (Typical)
	Voltage RMS	≤3mVrms (Typical)
	Current RMS	≤9mArms
Setup Temperature Coefficient ±(%of Output/℃+Offset)	Voltage	0.002% + 0.4mV
	Current	0.005% + 1.5mA
Read Back Temperature Coefficient ±(%of Output/℃+Offset)	Voltage	0.002% + 0.4mV
	Current	0.005% + 1.5mA
		0.005% + 1uA[5]
Rise Time (no load)	Voltage	≤20ms(10%-90%)
Rise Time (full load)	Voltage	≤30ms(10%-90%)
Fall Time (no load)	Voltage	≤150ms (90%-10%)
Fall Time (full load)	Voltage	≤15ms (90%-10%)
Rise Time (Iset 0A to 25A)	Current	≤20ms(10%-90%)
Transient Response Time	Voltage	≤100us (50%-100% load recovery to 150mV)
AC Input	Voltage	100V-240V
	Frequency	50/60Hz
Setup Stability-30min (%of Output +Offset)	Voltage	≤0.01% + 2mV
	Current	≤0.02% + 7mA
Setup stability-8h (%of Output +Offset)	Voltage	≤0.015% + 4mV
	Current	≤0.03% + 12mA
Readback Stability-30min (%of Output +Offset)	Voltage	≤0.01% + 2mV
	Current	≤0.02% + 7mA
Readback stability-8h (%of Output +Offset)	Voltage	≤0.015% + 4mV
	Current	≤0.03% + 12mA
Efficiency	75% (Typical)	

Copyright © Itech Electronic Co., Ltd.

Remote Sense Compensation Voltage	≤2.5V (Per each lead)
Command Response Time	5ms
Power Factor	0.98
Maximum Input Current	11A
Maximum input apparent power	1300VA
Storage Temperature	-10℃～70℃
Protective Function	OVP/UVP/OCP/UCP/OTP/OPP/Foldback
OVP Response Time	≤2ms
Communication Interface	USB/LAN as standard Optional GPIB/RS232
Isolation Voltage (output to PE)	240V
Isolation Voltage (input to PE)	1500Vac
Working Temperature	0～40℃
Fuse Specifications	15AT
Number of parallel machines	Not support
Number of machines in series	Not support
Protection class	IP20
Safety Regulation	IEC 61010
Cooling Style	Fans
Rack-Mount Dimension	214mm(W)×88.2mm(H)×450mm(D)
Dimension(Overall)	255mm(W)×108.2mm(H)×529.5mm(D)
Weight(net)	7.6kg

NOTE

1. The maximum output Current of the front panel terminals is 10A.
2. Measured under sense wiring condition.
3. When the Current measurement is at 20mA, the capacitive load of the power supply must not exceed 22uF.
4. Voltage setpoint accuracy and measured value accuracy are measured under sense wiring.
5. Small-range Current (20mA range) accuracy is measured at the power output CV state.

Copyright © Itech Electronic Co., Ltd.

Supplementary Instructions:

	Parameter	
ANALOG	Input Impedance	1MΩ
	Input programming accuracy	1%+1%FS
	Input programming bandwidth	10KHz
	Input programming temperature coefficient	100ppm
	Input Programming Pin Voltage Setting Value Range, and Resistance Value Range	±10V
	Monitoring accuracy	1%
	Output pin Voltage range and IMAX	±10V
	Output bandwidth	10KHz
	Output impedance	10K
	Analog port to output DC	1000V
IO	Voltage input range of IO port input pins	0V-5V
	IO port input pins IMAX source and sink	2mA
	IO port output pin Voltage output range	0V-5V
	IO port output pins IMAX source and sink	10mA
	IO port response time	10ms
	IO port to output DC	1000V
LIST	LIST Bandwidth	100Hz
	Voltage and current step value range and resolution	0.001V-60.600V/0.001A-25.250A 0.001V/0.001A
	Signal rise and fall time range	0.01s-10s
	maximum number of steps	100
	Maximum number of files	10
	Number of GROUP	1
	Time accuracy	0.001s
METER	Sampling rate	1000Hz
	Record Length	Maximum 1000

Copyright © Itech Electronic Co., Ltd.

IT-N6953

Parameter		IT-N6953
Rated value	Output Voltage	0～150V
	Output Current	0～10A
	Output Power	0～850W
	Resistance	/
Power regulation ±(%of Output+Offset)	Voltage	≤0.01%+10mV
	Current	≤0.02%+2mA
Load Regulation ±(%of Output+Offset)	Voltage	≤0.01%+10mV[1]
	Current	≤0.02%+2mA
Setup Resolution	Voltage	10mV
	Current	1mA
	Power	/
	OVP	10mV
	Resistance	/
Read Back Resolution	Voltage	1mV
	Current	1mA
		1uA (≤20mA)[2]
	Power	10mW
Setup Accuracy	Voltage	≤0.03%+30mV[3]
	Current	≤0.1%+10mA
	OVP	≤0.1%+0.4V
	Power	/
	Resistance	/
Read Back Accuracy	Voltage	≤0.03%+30mV
	Current	≤0.1%+10mA
		≤0.05%+20uA (20mA)[4]
	Power	≤0.2%+3W
Ripple (20Hz -20MHz)	Peak Voltage	≤30mVp-p (Typical)
	Voltage RMS	≤4.5mVrms (Typical)
	Current RMS	≤7mArms

Copyright © Itech Electronic Co., Ltd.

Setup Temperature Coefficient ±(%of Output/℃+Offset)	Voltage	0.002% + 1mV
	Current	0.005% + 0.6mA
Read Back Temperature Coefficient ±(%of Output/℃+Offset)	Voltage	0.002% + 1mV
	Current	0.005% + 0.6mA
		0.005% + 1uA[4]
Rise Time (no load)	Voltage	≤30ms(10%-90%)
Rise Time (full load)	Voltage	≤30ms(10%-90%)
Fall Time (no load)	Voltage	≤240ms (90%-10%)
Fall Time (full load)	Voltage	≤15ms (90%-10%)
Rise Time (Iset 0A to 25A)	Current	≤20ms(10%-90%)
Transient Response Time	Voltage	≤200us (50%-100% load recovery to 150mV)
AC Input	Voltage	100V-240V
	Frequency	50/60Hz
Setup Stability-30min (%of Output +Offset)	Voltage	≤0.01% + 5mV
	Current	≤0.02% + 3mA
Setup stability-8h (%of Output +Offset)	Voltage	≤0.015% + 10mV
	Current	≤0.03% + 5mA
Readback Stability-30min (%of Output +Offset)	Voltage	≤0.01% + 5mV
	Current	≤0.02% + 3mA
Readback stability-8h (%of Output +Offset)	Voltage	≤0.015% + 10mV
	Current	≤0.03% + 5mA
Efficiency	85% (Typical)	
Remote Sense Compensation Voltage	≤2.5V (Per each lead)	
Command Response Time	5ms	
Power Factor	0.98	
Maximum Input Current	11A	
Maximum input apparent power	1300VA	
Storage Temperature	-10℃～70℃	
Protective Function	OVP/UVP/OCP/UCP/OTP/OPP/Foldback	

Copyright © Itech Electronic Co., Ltd.

OVP Response Time	≤2ms
Communication Interface	USB/LAN as standard Optional GPIB/RS232
Isolation Voltage (output to PE)	240V
Isolation Voltage (input to PE)	1500Vac
Working Temperature	0～40℃
Fuse Specifications	15AT
Number of parallel machines	Not support
Number of machines in series	Not support
Protection class	IP20
Safety Regulation	IEC 61010
Cooling Style	Fans
Rack-Mount Dimension	214mm(W)×88.2mm(H)×450mm(D)
Dimension(Overall)	255mm(W)×108.2mm(H)×529.5mm(D)
Weight(net)	7.6kg

NOTE

1. Measured under sense wiring condition.
2. When the Current measurement is at 20mA, the capacitive load of the power supply must not exceed 47uF.
3. Voltage setpoint accuracy and measured value accuracy are measured under sense wiring.
4. Small-range Current (20mA range) accuracy is measured at the power output CV state.

Supplementary Instructions:

	Parameter	
ANALOG	Input Impedance	1MΩ
	Input programming accuracy	1%+1%FS
	Input programming bandwidth	10KHz
	Input programming temperature coefficient	100ppm
	Input Programming Pin Voltage Setting Value Range, and Resistance Value Range	±10V
	Monitoring accuracy	1%
	Output pin Voltage range and IMAX	±10V
	Output bandwidth	10KHz
	Output impedance	10K

Copyright © Itech Electronic Co., Ltd.

	Analog port to output DC	1000V
IO	Voltage input range of IO port input pins	0V-5V
	IO port input pins IMAX source and sink	2mA
	IO port output pin Voltage output range	0V-5V
	IO port output pins IMAX source and sink	10mA
	IO port response time	10ms
	IO port to output DC	1000V
LIST	LIST Bandwidth	100Hz
	Voltage and current step value range and resolution	0.001V-151.500V/0.001A-10.100A 0.001V/0.001A
	Signal rise and fall time range	0.01s-10s
	maximum number of steps	100
	Maximum number of files	10
	Number of GROUP	1
	Time accuracy	0.001s
METER	Sampling rate	1000Hz
	Record Length	Maximum 1000

IT-N6962

Parameter		IT-N6962
Rated value	Output Voltage	0～60V
	Output Current	0～25A[1]
	Output Power	0～1500W
	Resistance	/
Power regulation ±(%of Output+Offset)	Voltage	≤0.01%+4mV
	Current	≤0.02%+5mA
Load Regulation ±(%of Output+Offset)	Voltage	≤0.01%+4mV[2]
	Current	≤0.02%+5mA
Setup Resolution	Voltage	1mV
	Current	1mA

Copyright © Itech Electronic Co., Ltd.

	Power	/
	OVP	1mV
	Resistance	/
Read Back Resolution	Voltage	1mV
	Current	1mA
		1uA (≤20mA)[3]
	Power	10mW
Setup Accuracy	Voltage	≤0.03%+12mV[4]
	Current	≤0.1%+25mA
	OVP	≤0.1%+0.2V
	Power	/
	Resistance	/
Read Back Accuracy	Voltage	≤0.03%+12mV
	Current	≤0.1%+25mA
		≤0.05%+20uA (20mA)[5]
	Power	≤0.2%+3W
Ripple (20Hz -20MHz)	Peak Voltage	≤20mVp-p (Typical)
	Voltage RMS	≤3mVrms (Typical)
	Current RMS	≤9mArms
Setup Temperature Coefficient ±(%of Output/℃+Offset)	Voltage	0.002% + 0.4mV
	Current	0.005% + 1.5mA
Read Back Temperature Coefficient ±(%of Output/℃+Offset)	Voltage	0.002% + 0.4mV
	Current	0.005% + 1.5mA
		0.005% + 1uA[5]
Rise Time (no load)	Voltage	≤20ms(10%-90%)
Rise Time (full load)	Voltage	≤30ms(10%-90%)
Fall Time (no load)	Voltage	≤150ms (90%-10%)
Fall Time (full load)	Voltage	≤15ms (90%-10%)
Rise Time (Iset 0A to 25A)	Current	≤20ms(10%-90%)

Copyright © Itech Electronic Co., Ltd.

Transient Response Time	Voltage	≤100us (50%-100% load recovery to 150mV)
AC Input	Voltage	100V-240V[6]
	Frequency	50/60Hz
Setup Stability-30min (%of Output +Offset)	Voltage	≤0.01% + 2mV
	Current	≤0.02% + 7mA
Setup stability-8h (%of Output +Offset)	Voltage	≤0.015% + 4mV
	Current	≤0.03% + 12mA
Readback Stability-30min (%of Output +Offset)	Voltage	≤0.01% + 2mV
	Current	≤0.02% + 7mA
Readback stability-8h (%of Output +Offset)	Voltage	≤0.015% + 4mV
	Current	≤0.03% + 12mA
Efficiency	82% (Typical)	
Remote Sense Compensation Voltage	≤2.5V (Per each lead)	
Command Response Time	5ms	
Power Factor	0.98	
Maximum Input Current	11A	
Maximum input apparent power	1900VA	
Storage Temperature	-10℃～70℃	
Protective Function	OVP/UVP/OCP/UCP/OTP/OPP/Foldback	
OVP Response Time	≤2ms	
Communication Interface	USB/LAN as standard Optional GPIB/RS232	
Isolation Voltage (output to PE)	240V	
Isolation Voltage (input to PE)	1500Vac	
Working Temperature	0～40℃	
Fuse Specifications	15AT	
Number of parallel machines	Not support	
Number of machines in series	Not support	
Protection class	IP20	

Copyright © Itech Electronic Co., Ltd.

Safety Regulation	IEC 61010
Cooling Style	Fans
Rack-Mount Dimension	214mm(W)×88.2mm(H)×450mm(D)
Dimension(Overall)	255mm(W)×108.2mm(H)×529.5mm(D)
Weight(net)	7.6kg

NOTE

1. The maximum output Current of the front panel terminals is 10A.
2. Measured under sense wiring condition.
3. When the Current measurement is at 20mA, the capacitive load of the power supply must not exceed 22uF.
4. Voltage setpoint accuracy and measured value accuracy are measured under sense wiring.
5. Small-range Current (20mA range) accuracy is measured at the power output CV state.
6. 100Vac-197Vac derated to 850W, 220Vac ±10% to meet power rating.

Supplementary Instructions:

	Parameter	
ANALOG	Input Impedance	1MΩ
	Input programming accuracy	1%+1%FS
	Input programming bandwidth	10KHz
	Input programming temperature coefficient	100ppm
	Input Programming Pin Voltage Setting Value Range, and Resistance Value Range	±10V
	Monitoring accuracy	1%
	Output pin Voltage range and IMAX	±10V
	Output bandwidth	10KHz
	Output impedance	10K
	Analog port to output DC	1000V
IO	Voltage input range of IO port input pins	0V-5V
	IO port input pins IMAX source and sink	2mA
	IO port output pin Voltage output range	0V-5V
	IO port output pins IMAX source and sink	10mA
	IO port response time	10ms
	IO port to output DC	1000V
	LIST Bandwidth	100Hz

Copyright © Itech Electronic Co., Ltd.

LIST	Voltage and current step value range and resolution	0.001V-60.600V/0.001A-25.250A 0.001V/0.001A
	Signal rise and fall time range	0.01s-10s
	maximum number of steps	100
	Maximum number of files	10
	Number of GROUP	1
	Time accuracy	0.001s
METER	Sampling rate	1000Hz
	Record Length	Maximum 1000

IT-N6963

Parameter		IT-N6963
Rated value	Output Voltage	0～150V
	Output Current	0～10A
	Output Power	0～1500W
	Resistance	/
Power regulation ±(%of Output+Offset)	Voltage	≤0.01%+10mV
	Current	≤0.02%+2mA
Load Regulation ±(%of Output+Offset)	Voltage	≤0.01%+10mV[1]
	Current	≤0.02%+2mA
Setup Resolution	Voltage	10mV
	Current	1mA
	Power	/
	OVP	10mV
	Resistance	/
Read Back Resolution	Voltage	1mV
	Current	1mA
		1uA (≤20mA)[2]
	Power	10mW

Copyright © Itech Electronic Co., Ltd.

Setup Accuracy	Voltage	≤0.03%+30mV[3]
	Current	≤0.1%+10mA
	OVP	≤0.1%+0.4V
	Power	/
	Resistance	/
Read Back Accuracy	Voltage	≤0.03%+30mV
	Current	≤0.1%+10mA
		≤0.05%+20uA (20mA)[4]
	Power	≤0.2%+3W
Ripple (20Hz -20MHz)	Peak Voltage	≤30mVp-p (Typical)
	Voltage RMS	≤4.5mVrms (Typical)
	Current RMS	≤7mArms
Setup Temperature Coefficient ±(%of Output/℃+Offset)	Voltage	0.002% + 1mV
	Current	0.005% + 0.6mA
Read Back Temperature Coefficient ±(%of Output/℃+Offset)	Voltage	0.002% + 1mV
	Current	0.005% + 0.6mA
		0.005% + 1uA[4]
Rise Time (no load)	Voltage	≤30ms(10%-90%)
Rise Time (full load)	Voltage	≤30ms(10%-90%)
Fall Time (no load)	Voltage	≤240ms (90%-10%)
Fall Time (full load)	Voltage	≤15ms (90%-10%)
Rise Time (Iset 0A to 25A)	Current	≤20ms(10%-90%)
Transient Response Time	Voltage	≤200us (50%-100% load recovery to 150mV)
AC Input	Voltage	100V-240V[5]
	Frequency	50/60Hz
Setup Stability-30min (%of Output +Offset)	Voltage	≤0.01% + 5mV
	Current	≤0.02% + 3mA
Setup stability-8h (%of Output +Offset)	Voltage	≤0.015% + 10mV
	Current	≤0.03% + 5mA

Copyright © Itech Electronic Co., Ltd.

Readback Stability-30min (%of Output +Offset)	Voltage	≤0.01% + 5mV
	Current	≤0.02% + 3mA
Readback stability-8h (%of Output +Offset)	Voltage	≤0.015% + 10mV
	Current	≤0.03% + 5mA
Efficiency	85% (Typical)	
Remote Sense Compensation Voltage	≤2.5V (Per each lead)	
Command Response Time	5ms	
Power Factor	0.98	
Maximum Input Current	11A	
Maximum input apparent power	1900VA	
Storage Temperature	-10℃～70℃	
Protective Function	OVP/UVP/OCP/UCP/OTP/OPP/Foldback	
OVP Response Time	≤2ms	
Communication Interface	USB/LAN as standard Optional GPIB/RS232	
Isolation Voltage (output to PE)	240V	
Isolation Voltage (input to PE)	1500Vac	
Working Temperature	0～40℃	
Fuse Specifications	15AT	
Number of parallel machines	Not support	
Number of machines in series	Not support	
Protection class	IP20	
Safety Regulation	IEC 61010	
Cooling Style	Fans	
Rack-Mount Dimension	214mm(W)×88.2mm(H)×450mm(D)	
Dimension(Overall)	255mm(W)×108.2mm(H)×529.5mm(D)	
Weight(net)	7.6kg	

NOTE

1. Measured under sense wiring condition.
2. When the Current measurement is at 20mA, the capacitive load of the power supply must not exceed 47uF.
3. Voltage setpoint accuracy and measured value accuracy are measured under sense wiring.

Copyright © Itech Electronic Co., Ltd.

4. Small-range Current (20mA range) accuracy is measured at the power output CV state.
5. 100Vac-197Vac derated to 850W, 220Vac ±10% to meet power rating.

Supplementary Instructions:

	Parameter	
ANALOG	Input Impedance	1MΩ
	Input programming accuracy	1%+1%FS
	Input programming bandwidth	10KHz
	Input programming temperature coefficient	100ppm
	Input Programming Pin Voltage Setting Value Range, and Resistance Value Range	±10V
	Monitoring accuracy	1%
	Output pin Voltage range and IMAX	±10V
	Output bandwidth	10KHz
	Output impedance	10K
	Analog port to output DC	1000V
IO	Voltage input range of IO port input pins	0V-5V
	IO port input pins IMAX source and sink	2mA
	IO port output pin Voltage output range	0V-5V
	IO port output pins IMAX source and sink	10mA
	IO port response time	10ms
	IO port to output DC	1000V
LIST	LIST Bandwidth	100Hz
	Voltage and current step value range and resolution	0.001V-151.500V/0.001A-10.100A 0.001V/0.001A
	Signal rise and fall time range	0.01s-10s
	maximum number of steps	100
	Maximum number of files	10
	Number of GROUP	1
	Time accuracy	0.001s
METER	Sampling rate	1000Hz
	Record Length	Maximum 1000

Copyright © Itech Electronic Co., Ltd.

This specification is for reference only and is subject to change without notice.

5.2 Supplemental Characteristics

Recommended calibration frequency: once a year
Cooling style: fans

Copyright © Itech Electronic Co., Ltd.

Appendix

Specifications of Red and Black Test Cables

ITECH provides you with optional red and black test cables, which are sold individually and you can select for test. For specifications of ITECH test cables and maximum current values, refer to the table below.

Model	Description
IT-E30110-AB	1kV/10A/1m*2pcs Alligator clips-Banana plugs
IT-E30110-BB	1kV/10A/1m*2pcs Banana plugs-Banana plugs
IT-E30110-BY	1kV/10A/1m*2pcs Banana plugs-Y-type terminals
IT-E30312-YY	500V/30A/1.2m*2pcs Y-type terminals-Y-type terminals
IT-E30320-YY	500V/30A/2m*2pcs Y-type terminals-Y-type terminals
IT-E30615-OO	500V/60A/1.5m*2pcs Ring terminals-Ring terminals
IT-E31005LIC-OO	600V/100A/0.5m*2pcs Ring terminal low inductance
IT-E31010LIC-OO	600V/100A/1m*2pcs Ring terminal low inductance
IT-E31020LIC-OO	600V/100A/2m*2pcs Ring terminal low inductance
IT-E31040LIC-OO	600V/100A/2m*2pcs Ring terminal low inductance
IT-E31220-OO	500V/120A/2m*2pcs Ring terminals-Ring terminals
IT-E31250-OO	500V/120A/5m*2pcs Ring terminals-Ring terminals
IT-E32410-OO	500V/240A/1m*2pcs Ring terminals-Ring terminals
IT-E32420-OO	500V/240A/2m*2pcs Ring terminals-Ring terminals
IT-E32450-OO	500V/240A/5m*2pcs Ring terminals-Ring terminals
IT-E3301020-OO	3kV/100A/2m*2pcs Ring terminals-Ring terminals
IT-E3301050-OO	3kV/100A/5m*2pcs Ring terminals-Ring terminals
IT-E3302420-OO	3kV/240A/2m*2pcs Ring terminals-Ring terminals
IT-E3302450-OO	3kV/240A/5m*2pcs Ring terminals-Ring terminals
IT-E3303620-OO	3kV/360A/2m*2pcs Ring terminals-Ring terminals
IT-E3304020-OO	3kV/400A/2m*2pcs Ring terminals-Ring terminals
IT-E33620-OO	500V/360A/2m*2pcs Ring terminals-Ring terminals
IT-E33650-OO	500V/360A/5m*2pcs Ring terminals-Ring terminals
IT-E34020-OO	500V/400A/2m*2pcs Ring terminals-Ring terminals
IT-E34520-OO	500V/450A/2m*2pcs Ring terminals-Ring terminals
IT-E35030-OO	500V/360A/3m*2pcs Ring terminals-Ring terminals
IT-E36530-OO	500V/650A/3m*2pcs Ring terminals-Ring terminals

For maximum current of AWG copper wire, refer to table below.

AWG	10	12	14	16	18	20	22	24	26	28
maximum current value (A)	40	25	20	13	10	7	5	3.5	2.5	1.7

Note: AWG (American Wire Gage), it means X wire (marked on the wire). The table above lists current capacity of single wire at working temperature of 30°C. For reference only.

Copyright © Itech Electronic Co., Ltd.

Contact Us

Thanks for purchasing ITECH products. In case of any doubts, please contact us as follows:

1. Visit ITECH website: www.itechate.com.
2. Select the most convenient contact method, for further information.